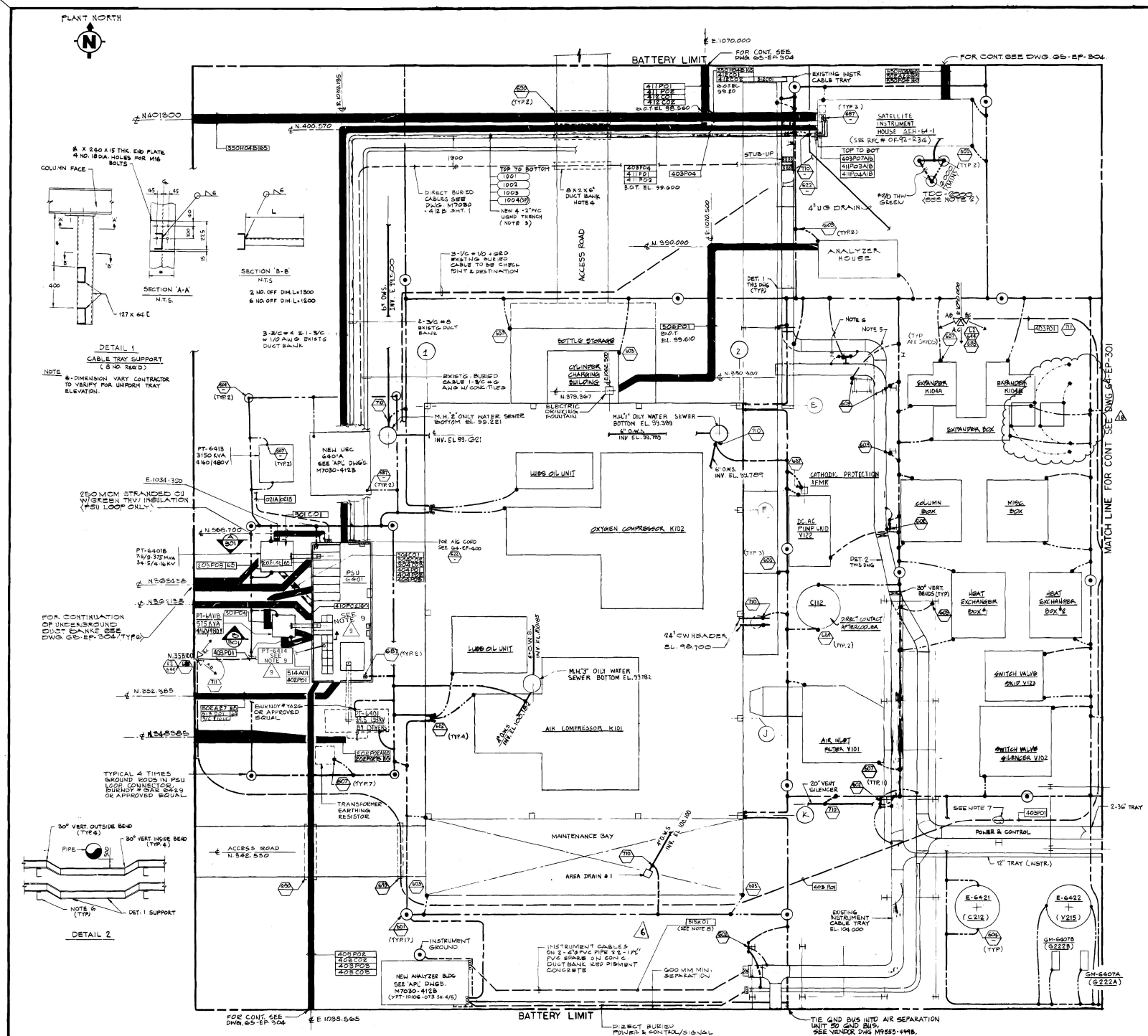
PLANT NORTH
BATTERY LIMIT
FOR CONT. SEE DWG. G5-EP-304
FOR CONT. SEE DWG. G5-EP-304
MATCH LINE FOR CONT SEE DWG. G4-EP-301
ACCESS ROAD
BOTTLE STORAGE
CYLINDER CHARGING BUILDING
ANALYZER HOUSE
EXPANDER KIOSK
EXPANDER BOX
LUBE OIL UNIT
OXYGEN COMPRESSOR K102
AIR COMPRESSOR K101
MAINTENANCE BAY
POWER & CONTROL
NEW UEC 6401A SEE APL DWGS. M7030-412B
PSU G401
SATELLITE INSTRUMENT HOUSE
KEY PLAN
DETAIL 1
CABLE TRAY SUPPORT
DETAIL 2
SECTION 'A-A'
SECTION 'B-B'
NOTES
1. FOR STANDARD ELECTRICAL SYMBOLS SEE DWG CO-AP-502-2
2. SIX SPECIAL INSTRUMENT GROUND SHALL NOT EXCEED 1Ω RESISTANCE.
3. PVC CONDUIT TO BE INSTALLED 460mm MINIMUM UNDERGROUND & TO BE ENCLOSED WITH RED PIGMENTED CONCRETE.
4. WORK THIS DRAWING WITH APL DRAWING NO. M7030-412B SHT. 1 THRU 5.
5. CONTRACTOR TO PROVIDE ADDITIONAL TRAY SUPPORT FIXED TO NEAREST COLUMN.
6. TYPICAL CABLE TRAY SUPPORT SEE DETAIL 'B' ON APL DRAWING NO. M7030-803A, 20 EACH REQ'D.
7. SPLICE TO THE EXISTING & REMOVE THE FLOOD LIGHTING.
8. EXISTING INSTRUMENT CABLE TRAY SHALL BE USED IN ROUTING CABLE 51SK01 GOING TO UNIT 50 CONTROL BUILDING. SEE DWG. NOS. 50-EP-401 & 50-EP-402 FOR CONTINUATION.
9. FOR UNDERGROUND & GROUNDING PLAN, SEE YEP DWG. NO. 064-DP-331 SHT. 001.
SAUDI YANBU PETROCHEMICAL COMPANY
MAXIMUM CAPACITY EXPANSION
UNIT 50 - AIR SEPARATION
COMBUSTION ENGINEERING
LUMMUS CREST INC. HOUSTON DIVISION
LEGEND
ENGINEERING STANDARDS DETAIL CALLOUT SEE INDICATED DRAWING (CO-AP-502)
POLE MOUNTED FLOODLIGHT
L6 FIXTURE TYPE FROM FIXTURE SCHEDULE (NO-AP-507)
644 INSTALLATION DETAIL DRAWING NUMBER
A/B FEEDER PHASE (480V) 120 (N) L & CKT NO (120V)
AIMING DIRECTION
688 OFF-SITE POLE LIGHTING STUB-UP DETAIL
REFERENCE DRAWINGS
DRAWING NO. | DESCRIPTION
G5-EP-304 | UNDERGROUND RACKWAY & GROUNDING PLAN AREA A
G4-EP-301 | UNDERGROUND, GROUNDING & LIGHTING PLAN UNIT 64
G4-ES-100 | UNIT 64 UNDERGROUND PIPING PLAN
CO-EP-200 | AREA CLASSIFICATION & KEY PLAN
G4-DP-101 | ELECT SINGLE LINE DIAGRAM
CO-AP-501 THRU 505 | ELECTRICAL STANDARD INSTALLATION DETAIL
50-EP-401 | ELECT PLAN, LIGHTING & CABLE TRAY
50-EP-402 | ELECT. PLAN, LIGHTING, CABLE TRAY & CONDUIT
064-DP-331 SHT. 001 | ELECTRICAL DETAILS PSU-6401
BECHTEL PETROLEUM, INC.
BECHTEL HOUSTON
SAUDI YANBU
PETROCHEMICAL COMPANY
ELECTRICAL UNDERGROUND, GROUNDING AND LIGHTING PLAN SHEET 1
UNIT 64-AIR SEPARATION AREA
AREA A
11211
64-EP-300
9

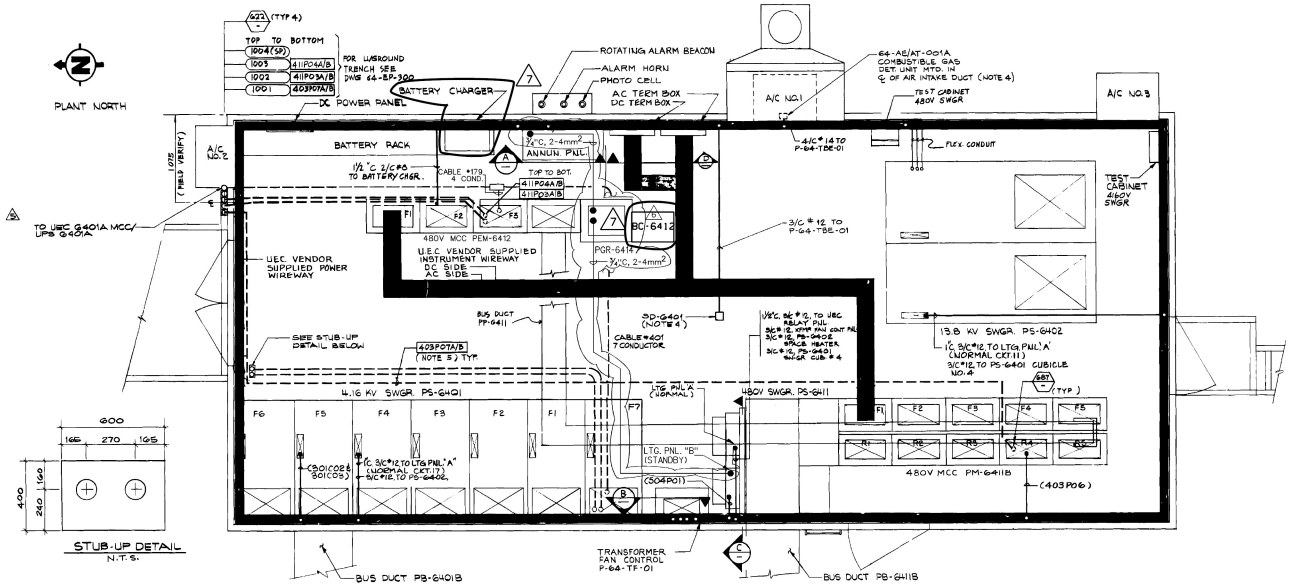

PLAN VIEW UEC PSU-6401

(CONDUIT ROUTING SHOWN DIAGRAMMATICALLY)
SCALE - 1:20

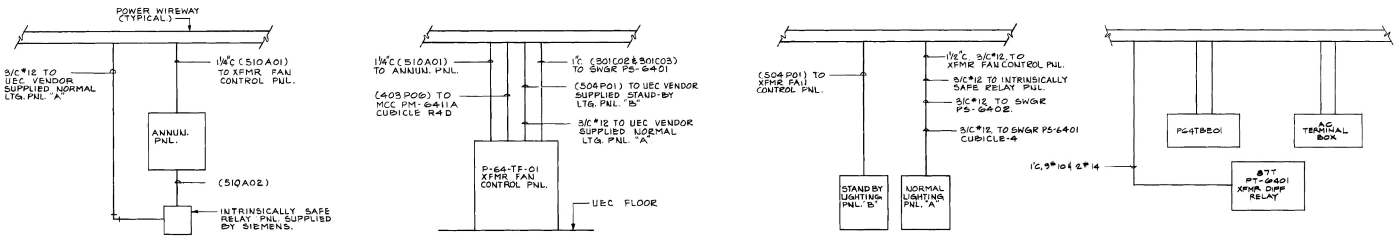

SECTION A N.T.S

SECTION B N.T.S

SECTION C N.T.S

SECTION D N.T.S

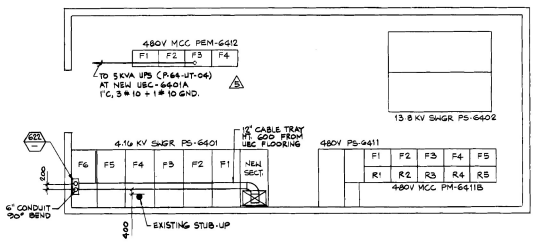

PARTIAL PLAN PSU-6401

(CABLE TRAY LAYOUT)
NTS

NOTES

1. ALL CONDUITS TO BE 3/4" RGS UNLESS OTHERWISE NOTED.
2. FOR CONDUIT WIRE FILL, REFER TO UNIT-64 CABLE SCHEDULE DWG NO 64-BP-770 UNLESS OTHERWISE NOTED. CABLE NOS ARE SHOWN IN PARENTHESIS.
3. FOR INSTRUMENT WIREWAY WIRE FILL REFER TO VENDOR INTERCONN. DIAGRAM DWG NO 8295-421A (BY AIR PRODUCTS)
4. EQUIPMENT:- 64-AE/AT-001A & SD-6401 ARE SUPPLIED UNDER M/E 11211-085P-151
5. CONDUIT TO BE ROUTED & SUPPORTED UNDERNEATH THE SUB-STATION

LEGEND

REFERENCE DRAWINGS

DRAWING NO	DESCRIPTION
64-BP-770	UNIT-64 CABLE SCHEDULE
64-EP-300	ELECT. U/G, GROUNDING & LIGHTING PLAN
V.P. 11211-064-A-001-AC 086	PLOT PLAN U/G ELECT. CONDUIT ROUTING LAYOUT.
V.P. 11211-064-A-001-AC 2196 & 2197	UEC INTERCONNECTION DIAGRAM.
V.P. 11211-064-A-001-AC 2199	CONDUIT STUB-UP DETAIL AT UEC
V.P. 11211-000-P-121-AC-1095	UEC PSU-6401
60-DP-761	ELECTRICAL CONDUIT & CABLE SCHEDULE
064-DP-331 SHT 002	MISCELLANEOUS WIRING DIAGRAMS PT-6414, PGR-6414, ANNUN. PANEL
64-DP-888	CONNECTION DIAGRAM, UEC-6401

No.	DATE	REVISIONS	BY	CHK	REV	PROJ ENGR	PROJ MGR	APPR
7	28MAY 2003	REVISED PER MOC# OF-02-PC-22	JNC	MMS	TAA	MMS	MMS	HHS
6	9JUN 2002	AS-BUILT FOR YEP INSTALLED EQUIPMENTS	JNC		TAA			HHS
5	24MAY 1999	REVISED TO AS-BUILT (99-070)	SRC					
4	21MAY 1997	ADDED NEW SECTION IN SWGR PS-6401 FOR PSU: 90-070	JN					
3	08NOV '96	REVISED TO INCORPORATE PROJECT NO. 94-058	PTS	PB		PB	PB	PB
2	8/1/86	AS-BUILT	SW					
1	5/20/83	ISSUED FOR CONSTRUCTION						

SCALE 1:20 DESIGNED R.S.PATEL DRAWN R.S.PATEL

BECHTEL PETROLEUM, INC.
HOUSTON

SAUDI YANBU PETROCHEMICAL COMPANY

ELECTRICAL ABOVEGROUND POWER PLAN
UEC PSU-6401
UNIT 64 AIR SEPARATION

JOB No.	DRAWING No.	REV.
11211	64-EP-400	6

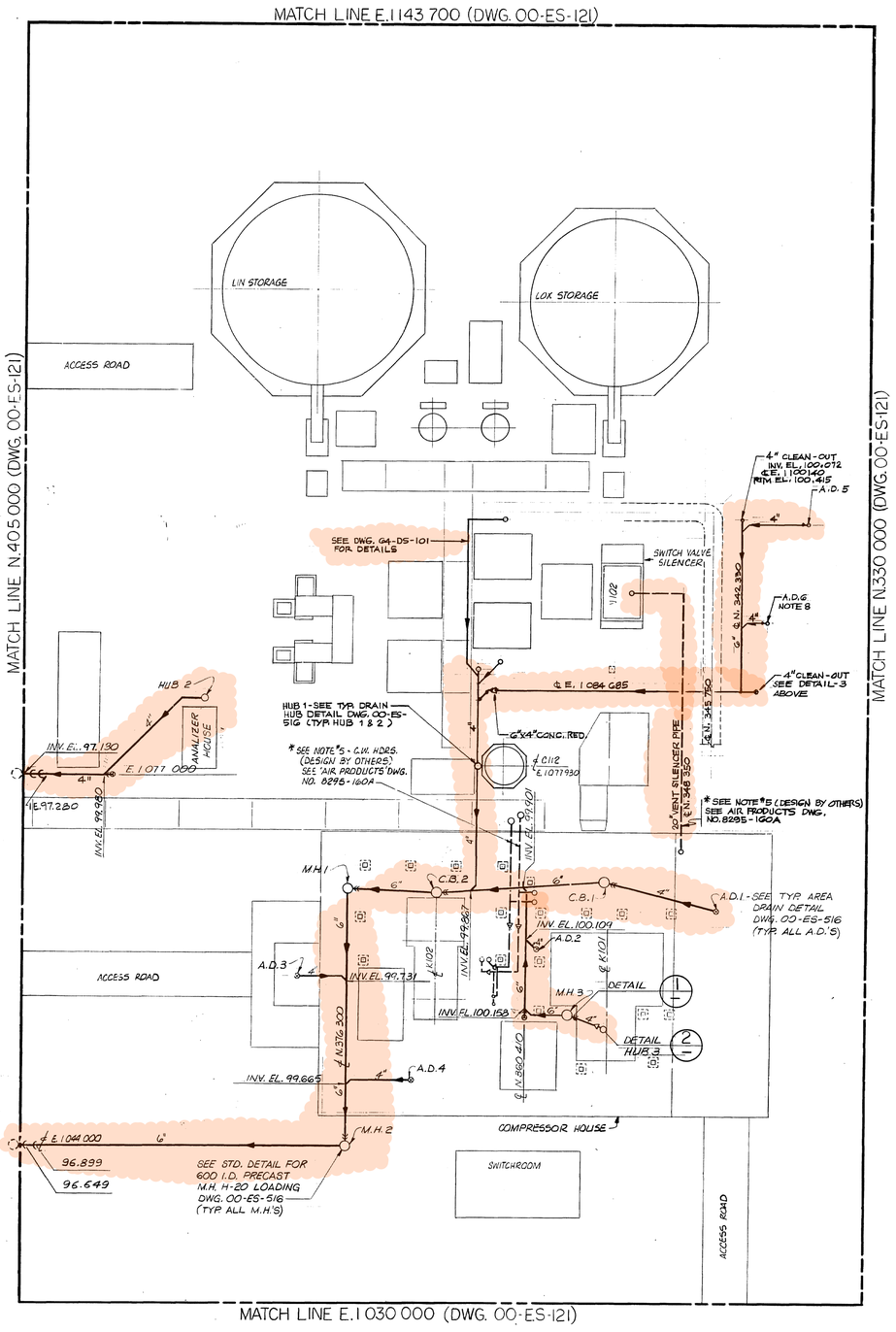

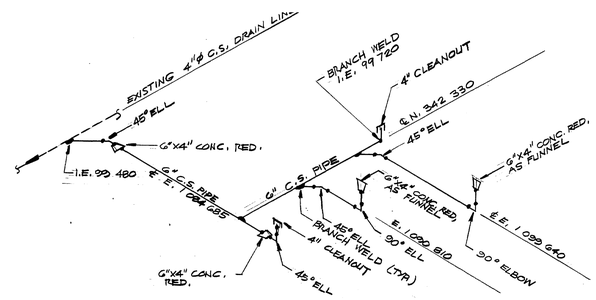

DETAIL 3

ALL INVERT ELEVATIONS INDICATED ARE BASED ON DATUM: (BECHTEL 100.50 = APL. 100.00)

U/G DRAIN SYSTEM SCHEDULE

A.D., C.B., M.H. & HUB NO.	APL DRAIN DESIGNATION	COORDINATES @ ℄ NORTH	COORDINATES @ ℄ EAST	INLET INVERT EL. NORTH-SOUTH	INLET INVERT EL. EAST-WEST	COMMON SEAL INVERT EL.	OUTLET INVERT EL.	RIM ELEVATION	BOTT. OF C.B. OR M.H.
A.D. 1	D.P.6	343 300	1 065 000				100.100	100.485	
A.D. 2	D.P.1	359 310	1 061 730				100.200	100.450	
A.D. 3	D.P.10	380 500	1 059 240				100.100	101.335	
A.D. 4	D.P.3	370 400	1 050 000				100.100	100.450	
A.D. 5	—	337 285	1 099 640				100.220	100.720	
A.D.6	—	340 830	1 090 810				100.178	100.494	
C.B.1	D.P.4	353 260	1 067 500	100.00		99.650	99.950	100.450	99.500
C.B.2	D.P.2	368 400	1 066 680	99.845		99.595	99.845	100.485	99.445
M.H.1	NONE	376 300	1 067 500	99.789		99.539	99.789	100.300	99.389
M.H.2	NONE	376 300	1 044 000		99.621	99.371	99.621	99.890	99.221
M.H.3	NONE	356 510	1 055 760	100.152		99.932	100.185	100.500	99.782
HUB 1	D.P.8	364 775	1 077 930				100.245		
HUB 2	D.P.12	387 950	1 084 050			99.900	100.100		
HUB 3	D.P.5	353 260	1 054 545				100.212		

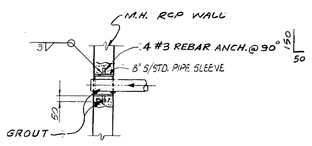

DETAIL 1 (N.T.S.)

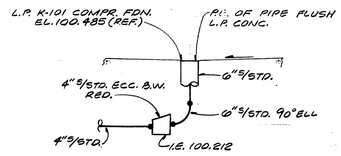

DETAIL 2 (1:10)

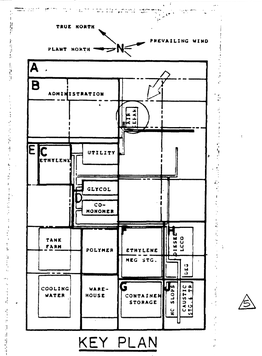

KEY PLAN

LIST OF MATERIAL

ITEM	QUAN.	DESCRIPTION	ORDER NO.
1	3	CU. METERS CONCRETE f'c = 21 MPa	000-Z-001
2		REINFORCING STEEL — NO. 3 / 4 / 5 / 6; KG. — 66; NO.; KG.	000-Q-020
3	17	CONCO STD. RCP 600 I.D. x 300 LG. SEC.	000-S-320
4	2	RICHARD FOUNDRY #A2280 FRAME & GRATE ATSM A-48 CL-30 H-20 LOADING	000-S-314
5	3	RICHARD FOUNDRY #A-2658 FRAME & SOLID COVER ASTM A-48 CL-30 H-20 LOADING	000-S-314
6	EA	GRATING-GP-5 PER DWG. 00-CS-518	000-M-010
7	10 L.M.	4" PIPE - C&W BE XS CS API-5L-B SMLS (PCC057)	
8	40 L.M.	6" PIPE - C&W BE XS CS API-5L-B SMLS (PCC057)	
9		90°-LR ELL BW STD CS A234-WPB (WNC051)	
	2 EA.	4"	
	1 EA.	6"	
10		45° ELL BW STD CS A234-WPB (WFC051)	
	3 EA.	4"	
	4 EA.	6"	
11	3 EA.	6"X4" CONC. RED. BW STD CS A234 WPB (WRC051)	
12.	2 EA	4" IPS THREAD BRASS PLUG W/ CSK HEAD (FLUSH W/ PAVING)	
13	2 EA.	4" CS CPLG 300 THD. MI 187 GALV.	

PROJ. NO. 90-070

NOTE:
FOR "L" CATEGORY PIPING, SEE SCREEN PRODUCED LIST OF MATERIAL FOR THIS DWG.

GENERAL NOTES

1. COMPR. HOUSE H.P. FINISHED FLR. EL. = 100.50
2. ALL DIMENSIONS SHOWN ARE IN MILLIMETERS. ALL ELEVATIONS ARE IN METERS. ALL PIPE SIZES ARE IN INCHES.
3. FOR GENERAL NOTES AND LEGEND SEE DWG. 00-ES-126.
4. ALL HORIZONTAL AND VERTICAL PIPING BENDS TO BE 45° U.N.O.
5. DESIGN OF PIPING PER AIR PRODUCTS LTD. - ENGLAND: MATERIAL FURNISHED BY BECHTEL INC. PER CONFERENCE NOTES CF-1650 & 1022.
6. ALL PIPE & FITTINGS ARE REFERENCED TO SPECIFICATION L-1, CD-20 (U.O.N)
7. ALL UNDERGROUND PIPE AND FITTINGS TO BE COATED AND WRAPED PER SPEC. L-11.
8. USE 6"X4" CONC. RED. AS FUNNEL.

REFERENCE DRAWINGS

UNDERGROUND PIPING KEY PLAN	00-ES-126
TYPICAL UNDERGROUND DETAILS	00-ES-516
AIR PRODUCTS DWG. - U/G PIPING ISO DETAIL	8295-160A
AIR PRODUCTS DWG. - COMPR. HOUSE FLOOR PLAN, SHTS. 2 & 4	M8295-120A
AIR PRODUCTS DWG. - PIPE RACK & PLATFORM FND. DETAIL	M8295-130B
AIR PRODUCTS DWG. - D.C.A.C. - C112 & PUMP SKID FND. DET.	M8295-143A
AIR PRODUCTS DWG. - FDN. LAYOUT SHT. 1 & 2	M8295-150A
AIR PRODUCTS DWG. - TRANSFORMER & ANALIZER BLDG. SHT. 1	M8295-144A
DEMAG DWG. CONDENSATE OUTLET DETAIL	055108151
UNDERGROUND PIPING PLAN UNIT-00	00-ES-121
ELECT. UNGND. GROUNDING, AND LIGHTING PLAN	G4-EP-300
ELECT. UNGND. GROUNDING, AND LIGHTING PLAN	G4-EP-301
UNGND ELECT. CONDUIT LAYOUT	8295-408A
UNGND ELECT. CONDUIT CABLE LAYOUT	8295-110A

SCANNED

No	DATE	REVISIONS	BY	CHK	DESIGN SUPV	ENG'R	PROJ ENGR	APPR
8	15 DEC 91	REVISED COORDINATES TO N.342 400 WAS 343 150.	ACC					
7	19 SEP 91	ADDED A.D. 5 & 6 AND SEWER PIPE TIE-IN PER PROJECT NO. 90-070	ACC					
6	7/1/85	REVIEWED AS-BUILT, NO CHANGE	MH	SE				
5	7/12/82	REV. KEY PLAN & DETAIL "1"; ADDED SEAL & DELETED "P"-TRAP	D. M	JP		JP	PJ OC	DM
4	7/9/82	REVISED DETAIL "1" LIST OF MATERIAL & REV. ELEV.	K.S	JP	JP	JP	VN O.C.	DM
3	7/26/82	REVISED ELEVATIONS	K.S	RC	JT JP	JP	VN O.C.	CHR DM
2	CH 1 30 82	AS-BUILT PER PROJECT 90-070.	ACC	DE	LNK	LNK		
1	5/24/82	ISSUED FOR CONSTRUCTION	JAS	RJ	JP	JP	VN O.C.	CHR DM

SCALE 1:200 U.N. | DESIGNED D. WANG | DRAWN D.H.T. 4/13/82 | SHEET 1 OF 1

BECHTEL PETROLEUM, INC.
HOUSTON

SAUDI YANBU PETROCHEMICAL COMPANY

UNDERGROUND PIPING
PLAN, SECTIONS AND DETAILS
UNIT 64: AIR SEPARATION

AREA	JOB No.	DRAWING No.	
A	11211	64-ES-100	9

64-ES-100

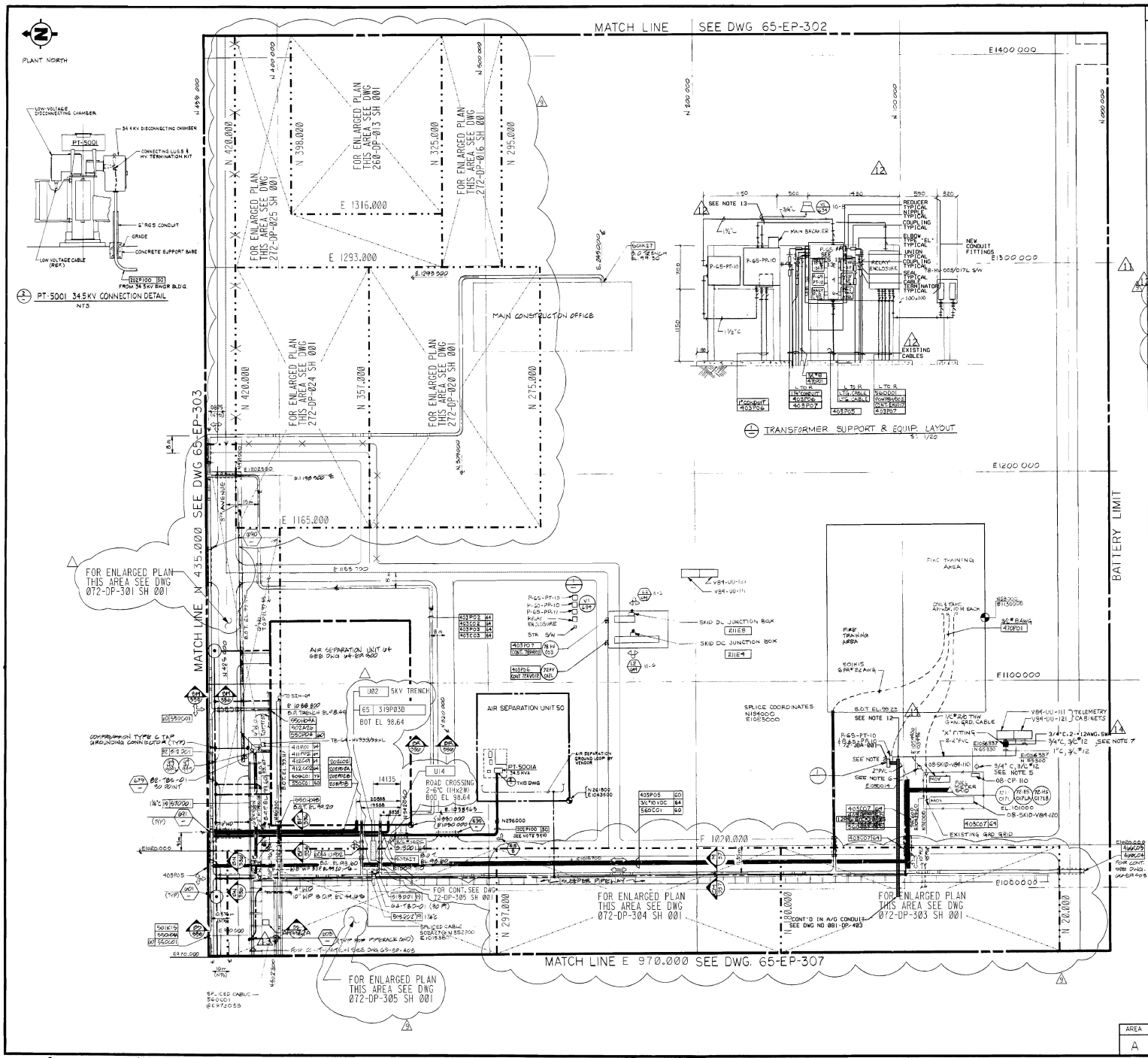

NOTES

1. FOR GENERAL NOTES SEE DWG. 65-EP-503
2. REPLACE FABRICATE SW. TO-1 FROM STOCK (CODE #305FF) WITH PUSH-BUTTON STOP (CODE # D7FF41).
3. SEE DETAIL 1 FOR MOUNTING AND LAYOUT OF TRANSFORMER AND POWER PANEL FOR ARAMCO FUEL GAS METERING SKIDS. FOR CONNECTIONS AND NECESSARY MATERIAL, SEE DETAIL 00-AP-649. LOCATE OUTSIDE HAZARDOUS AREA CLASS I, DIV 2. SEE ARAMCO DWG NB-E22496.
4. FOR FUEL GAS METERING SKIDS EQUIPMENT LAYOUT, SEE ARAMCO DWG. NA-E22507.
5. 125 VDC POWER FEED (CKT #6) FROM DC DISTRIBUTION PANEL IN DEC-6401 FOR SOLENOID VALVE 08-EV-110 (@08-UP-110). FIELD TO INSTALL 15A BREAKER IN CURRENTLY BLANK POSITION (PNL. P-64-DLP-01).
6. FIELD TO CONNECT #4 AWG GROUND WIRE AT TRANSFORMER TO ARAMCO GROUND GRID SYSTEM. SEE ARAMCO DWG. NB-E22507.
7. FOR 120 VAC CONNECTIONS AT TELEMETRY PANELS. SEE ARAMCO DWG. NB-E22496 & NB-E22527.
8. FOR EQUIPMENT CONNECTIONS AND MATERIAL. SEE DWG. DETAIL 00-AP-649.
9. FIELD VERIFY ROUTING OF 34.5KV CABLE AND MAINTAIN REQUIRED CLEARENCES AT EXIST. UNDERGROUND CABLE PIPE AND OTHER OBSTRUCTIONS AS PER BECHTEL SPEC'S.
10. FIELD TO LOCATE AND PROVIDE AS-BUILT LOCATIONS OF 34.5KV CABLE SPLICES.
11. FOR P-65-PP-11(R) PANEL SCHEDULE. SEE DWG. NO. 65-CP-761
12. CONTRACTOR SHALL RUN THE POWER CABLES TO THE REQUIRED DESTINATION.
13. FOR NEW INSTALLATION DETAIL. SEE DWG. NO. 65-DP-422.

GENERAL NOTES

1. FOR GENERAL NOTES, SEE DRAWING 000-DP-001 SHEETS 001 AND 002.
2. FOR DRAFTING SYMBOLS, SEE DRAWING 000-DP-002 SHEETS 001 THROUGH 008.
3. FOR STANDARD ASSEMBLY DETAILS, SEE DRAWINGS 000-DP-003 SHEET 1 THROUGH 000-DP-015.

REFERENCE DRAWINGS

DWG NO	TITLE
00-AP-001	GROUND ROD INSTALLATION DETAIL
00-AP-090	CABLE ROADWAY CROSSING
00-AP-091	ISOLATING GROUND GRID
04-EP-800	UNDERGROUNDS, GNDG & LIGHTING PLAN
09-EP-104	34.5KV SINGLE LINE DIAGRAM
09-EP-302	UGND RACEWAY & GNDG PLAN
09-EP-303	UGND RACEWAY & GNDG PLAN
09-EP-307	UGND RACEWAY & GNDG PLAN
09-EP-955	SECTIONS & DETAILS
09-EP-700	CABLE SCHEDULE
00-EP-403	AREA LIGHTING PLAN
09-EP-105	ONE LINE DIA. - EMER. PWR SYSTEM
65-EP-257	UGND RACEWAY SECTIONS & DETAILS
65-CP-761	PANEL SCHEDULE P-65-PP-10 & P-65-PP-11

LEGEND

FOR LEGEND SEE DWG 65-EP-503

BECHTEL PETROLEUM, INC.

REV	DATE	REVISIONS	BY	CHK	DESIGN	ENGR	PROJ ENGR	APPR
1	2004	PROJECT AS-BUILT PER MOC# DP-99-PC-01			BRT	SB	TAA	
2	2002	SCHMC AS-BUILT PER MOC# DP-99-PC-01 AFE# 2002-145			JB	ABK	TAA	BAA
3	2010	ENGV REV. AS-BUILT AS PER MOC# DP-10-EPC-002			GNE	JB		
4	2002	ISSUED FOR REVIEW & COMMENTS			JB	ABK	TAA	BAA
5	2002	ISSUED FOR REVISED PER AFE# 2002-145			AVB	ABK	TAA	BAA

SCALE 1:100 DESIGNED BP DRAWN BP

BECHTEL
HOUSTON

SAUDI YANBU
PETROCHEMICAL COMPANY

ELECTRICAL
UGND RACEWAY & GNDG PLAN
UNIT 65 DISTRIBUTION

AREA	JOB No	DRAWING No	REV
A	11211	65-EF-304	14

34 X 44 "E" SIZE

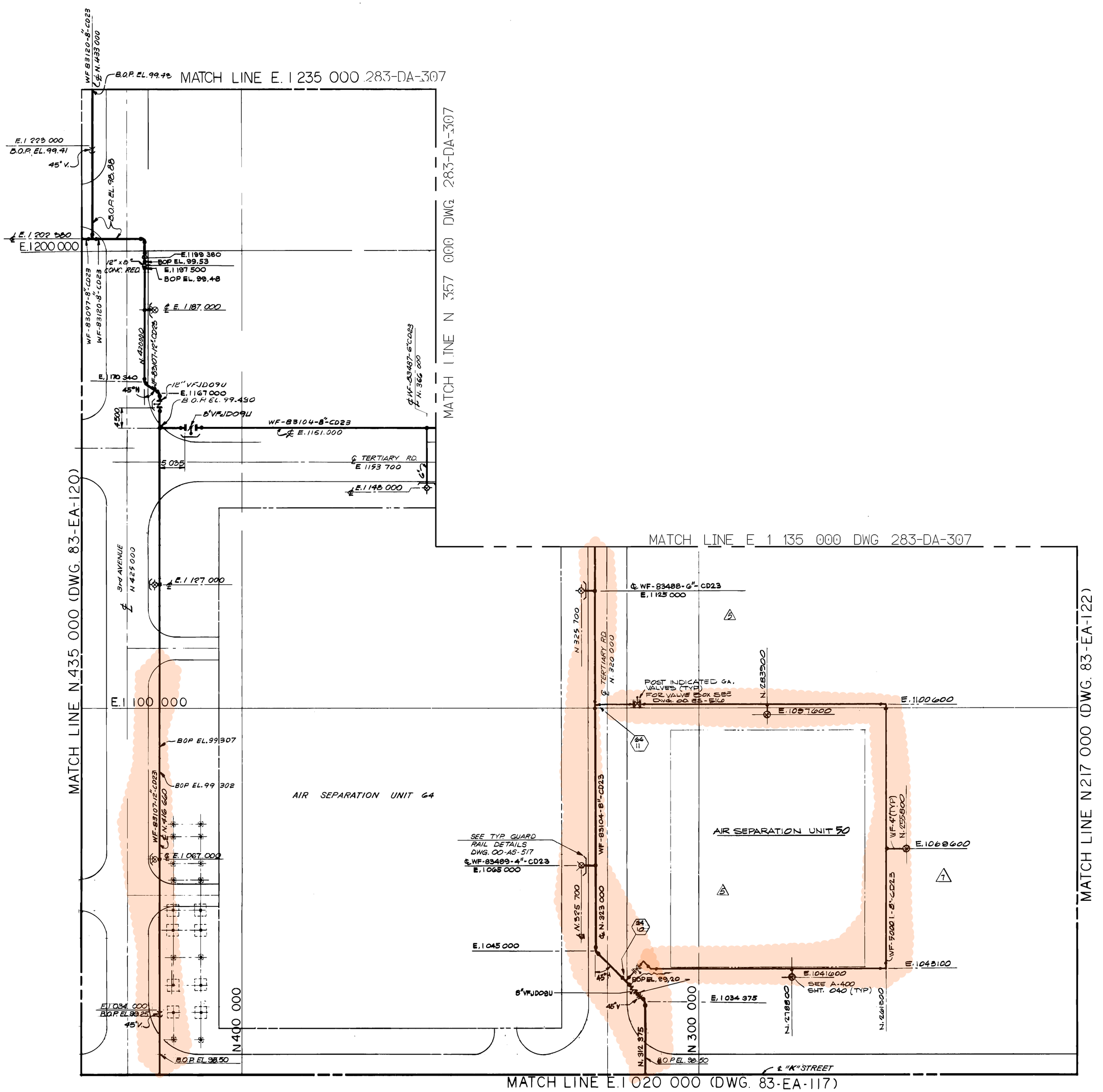

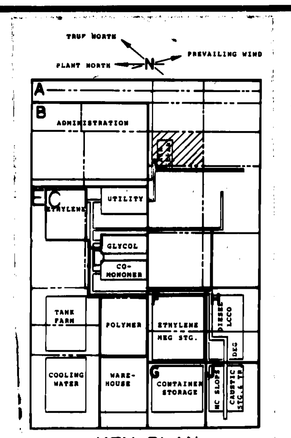

KEY PLAN

(NO SCALE)

LIST OF MATERIAL

ITEM	QUAN	DESCRIPTION	ORDER NO.
1	2.5	CU. METERS. CONC. F'c = 21 Mpa	000-Z-006
2	1 LOT	"L" CATEGORY PIPING	

NOTES

1. FOR GENERAL NOTES & LEGEND SEE DWG. 83-EA-127 OVERALL FIREWATER KEY PLAN.
2. FOR "L" CATOGORY PIPING, SEE SCREEN PRODUCED LIST OF MATERIALS FOR THIS DWG.

REFERENCE DRAWINGS

OVERALL FIREWATER KEY PLAN	83-EA-127
OVERALL UNDERGROUND PIPING PLAN	00-85-126
ELEC. UGND. RACEWAY & GNDG. PLAN	65-EP-307
PLOT PLAN AREA "A" AIR SEPARATION & FLARES	00-EA-110
GUARD RAIL DETAILS	00-AS-517

REV	DATE	DESCRIPTION	DRN.	DES.	PROJ.	ENG.	PM	PCD	—	APP.
7	7/5/02	ADDED UNIT #50 FIRE WATER LOOP FOR APPR'L								

SAUDI YANBU PETROCHEMICAL COMPANY
MAXIMUM CAPACITY EXPANSION

COMBUSTION ENGINEERING — LUMMUS CREST INC. HOUSTON DIVISION

REV	DATE	REVISIONS	BY	CHK'D	PROJ. ENG'R	ENG'R	PM	APPR
6	12/4/00	REVISED TO AS-BUILT	ADC	MWT				
5	7/9/93	ADDED LINE NUMBERS		JP	JP			
4	11/17/92	ADDED UPDATED LIST OF MATERIAL	JS	JP	JP			
3	11/6/92	REV. BOP; DELETE 8" VALVE; ADD COORD TO 45 ELL & VALVE		D M	JP			
2	8/27/92	REMOVED HOLD NOTE; ADDED SCREEN MATL. TAKE-OFF			JP			
1	8/14/82	ISSUED FOR CONST. W/ HOLDS						

SCALE 1:333.3 | DESIGNED K. PATEL | DRAWN MWT

BECHTEL PETROLEUM, INC.
HOUSTON

SAUDI YANBU
PETROCHEMICAL COMPANY

FIREWATER PLAN
UNIT 83 FIRE PROTECTION SYSTEM

AREA	JOB No.	DRAWING No.	REV
A	11211	83-EA-121	7

(9/76) 80806-OH

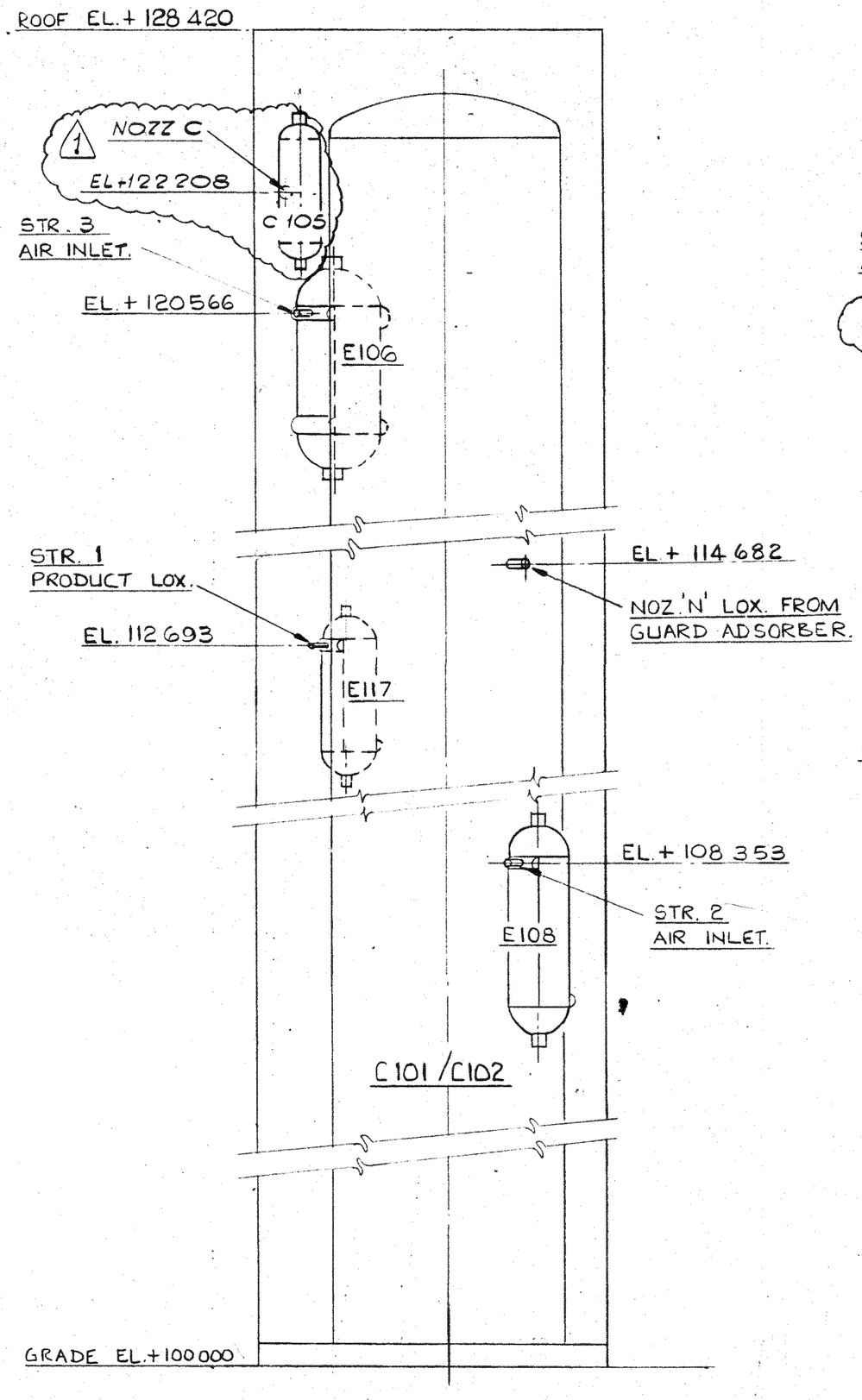

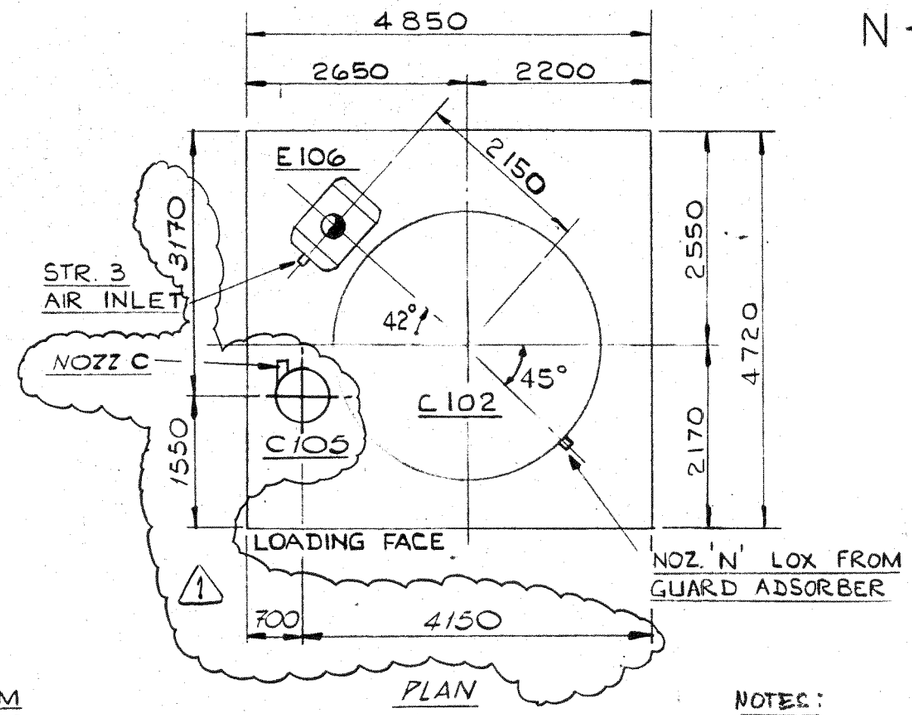

NOTES:

1- APL DATUM ELEVATION 100,000M = PLANT SITE ELEVATION 100,500M (HUNTING SURVEY EL. 5.25 M).

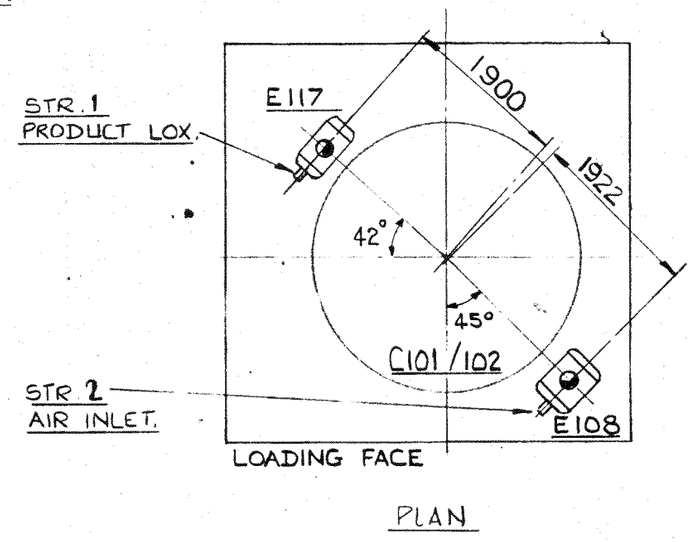

DWG. STATUS
SIGNED
DATE 5/20/82
BECHTEL HOUSTON

DATE RECEIVED 5/11/82

IMPORTANT: Permission to proceed does not constitute acceptance or approval of design details, calculations, analyses, test methods or materials developed or selected by the supplier and does not relieve supplier from full compliance with contractual obligations.

(1) ☐ Work May Proceed.
(2) ☐ Revise and Resubmit. Work May Proceed Subject to Incorporation of Changes Indicated.
(3) ☐ Revise and Resubmit. Work May Not Proceed.
(4) ☐ Review Not Required. Work May Proceed.

HO-80806(2/81)

V. P.— 11211-064-A-001AC 358/0

EQUIP. NO. C-6401 & C-6402

BECHTEL
HOUSTON
SAUDI YANBU
PETROCHEMICAL COMPANY
M/R 11211-64-A-1
DWG NO.

No.	DESCRIPTION	DATE	BY	CHK.
1	SEE ECN 11724	16/4/82	TGV	
O	ORIGINAL ISSUE	25/3/82	A McC	TGV
P	PRELIMINARY ISSUE	21/10/81	AMcC	

REVISIONS

SCALE: —
DRAWN: A. McC.
CHECKED: T.G.V.
APPROVED: W. Khan
DATED 25/3/82

AIR PRODUCTS LTD.

COLUMN BOX EQUIPMENT

ARRANGEMENT.

DRAWING No. 8295 - 615D

SHEET 1 OF 1

251

27701

M7030-3110A
SHEET 1 OF 3

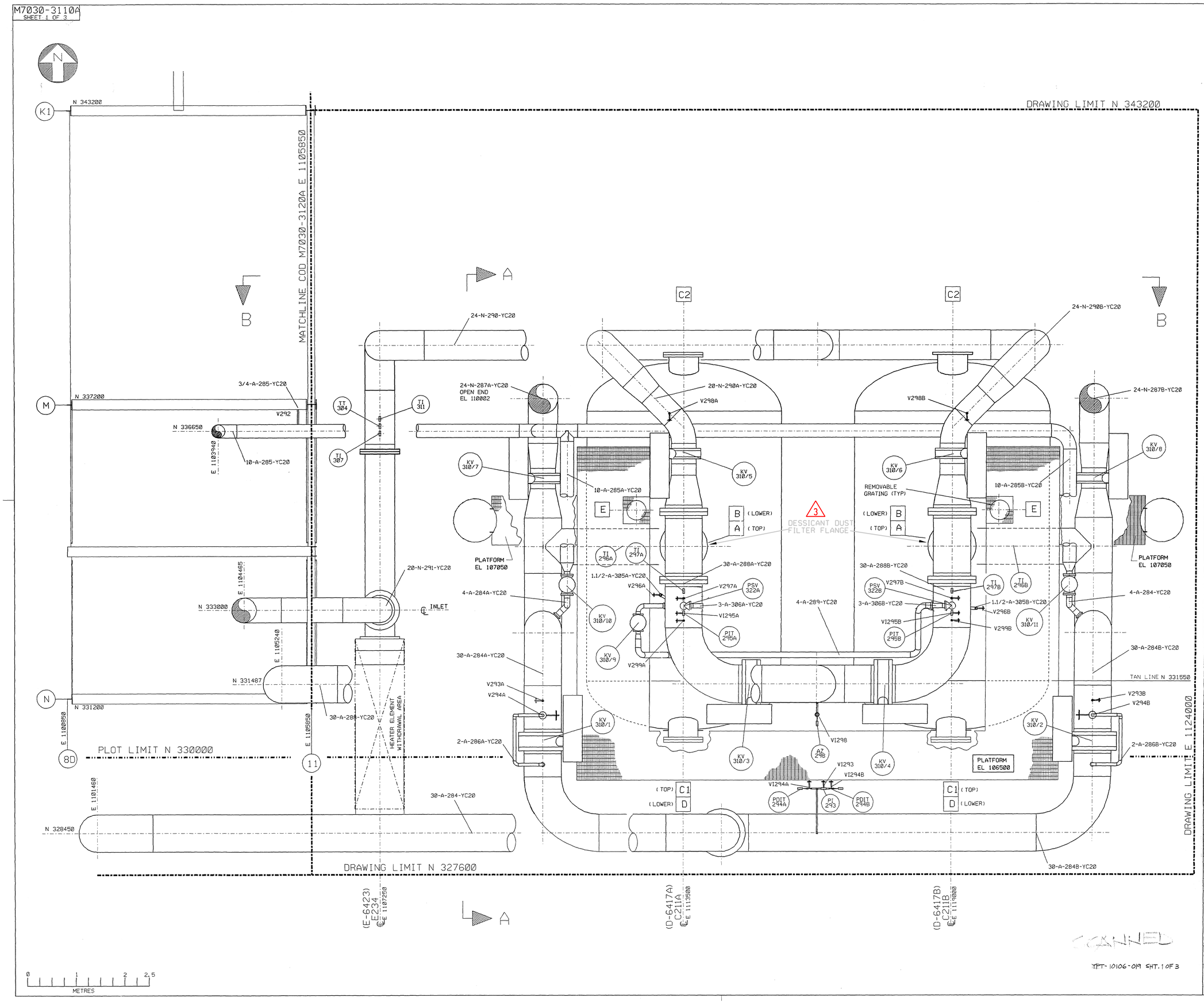

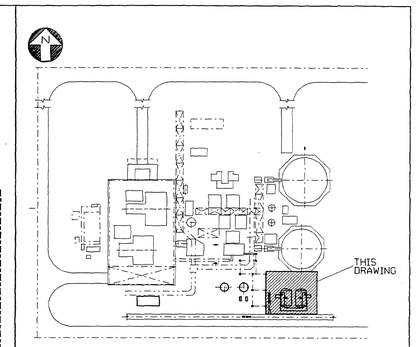

KEY PLAN

REFERENCE DRAWINGS	
M8295-10B	PLOT PLAN
M8295-12A	EQUIPMENT ARRANGEMENT

NOTES

1. FOR ALL OTHER REFERENCE DRAWINGS SEE ISOMETRIC FRONT SHEET M7030-3111D.
2. ELEVATIONS ON THIS DRAWING ARE TO APL DATUM 100000 = 100500 PLANT SITE ELEVATION.
3. SECTIONS A-A & B-B SHOWN ON THIS DRAWING REFER TO DETAILS ON DRAWINGS M7030-3110A SHT 3 & M7030-3110A SHT 2 RESPECTIVELY.

RED = ORIGINAL
DO NOT DESTROY

BATCH REF: - AR-W/MSBX/SITE

REV	ECN	REVISIONS	DATE	DRAWN	CHKD	APPD
3		AS BUILT PER MOC OF-18-PC-014	09DEC18	ISS	MOC	AYB
2		REVISED TO "AS-BUILT". NO CHANGES	05DEC92	AOC		HHC
1	18932	SEE ECN	2-10-91	BTS	JC	
0	-	ORIGINAL ISSUE	26-7-91	MJG	LCA	IRC
P	-	PRELIMINARY ISSUE	MAY '91	JSH		

PIPING GENERAL ARRANGEMENT
MOLECULAR SIEVE AREA
YANBU - SAUDI ARABIA

AIR PRODUCTS YPT-10106-019

DRAWN: JSH DATE: MAY '91
CHECKED: SB SCALE: 1:25
APPROVED: J. HOLDER

DRG NO. M7030-3110A
SHEET 1 OF 3

FILE NAME: - 3110A01.DGN

SCANNED

YPT-10106-019 SHT. 1 OF 3

YPT-10106-19 SH 1 OF 3

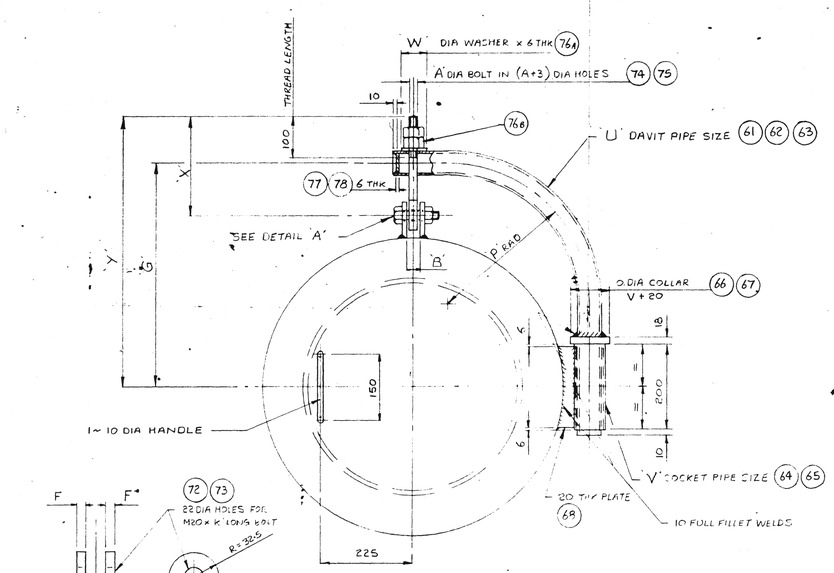

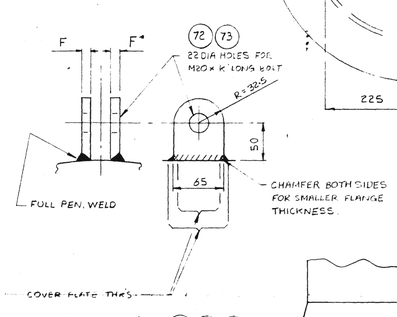

DETAIL 'A' (69) (70) (71)

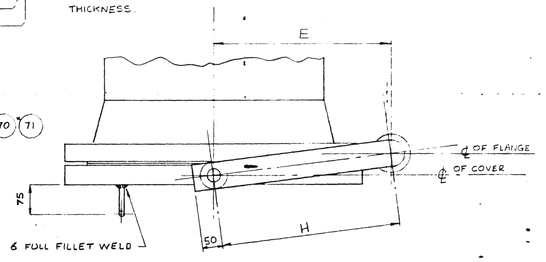

SIZE NOM. DIA	A	B	E	F	G	H	K	P	U	V	W	X	Y
18"	M24	27	380	12	500	382	75	305	2"NB SCH 40	2½"NB SCH 40	60	235	603
24"	M24	27	490	14	600	493	80	360	3"NB SCH 40	4"NB x SCH 120	60	265	721
14"	M24	27	330	12	450	331	75	220	2"NB SCH 40	2½"NB SCH 40	60	235	552

DAVIT FOR MANHOLE WITH VERTICAL COVER

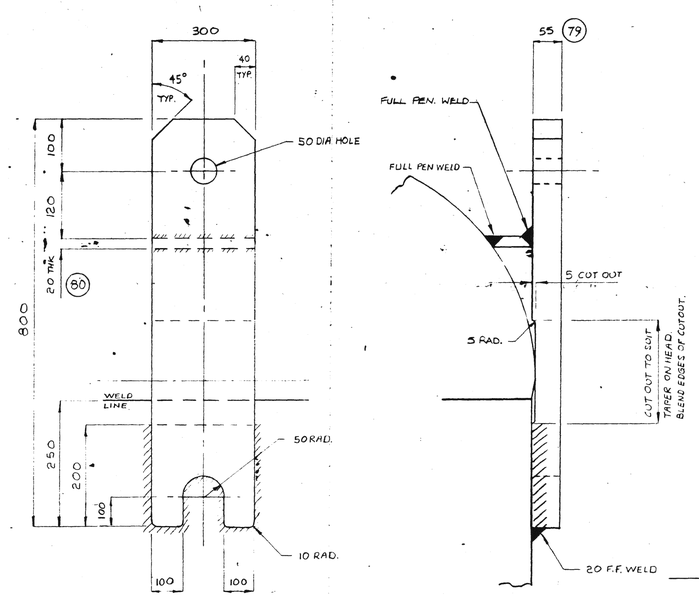

DETAILS OF LIFTING LUGS (2 REQ'D)

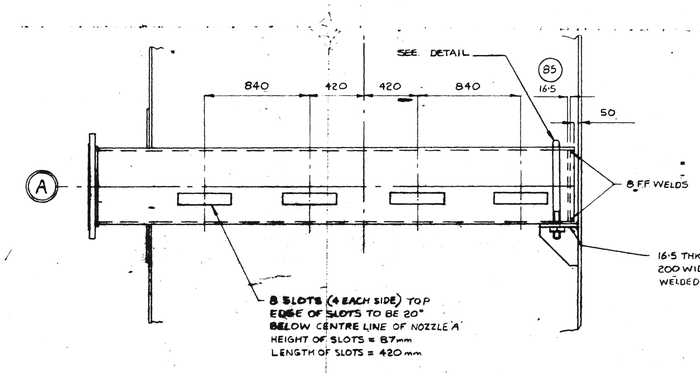

DETAILS OF AIR INLET PIPE

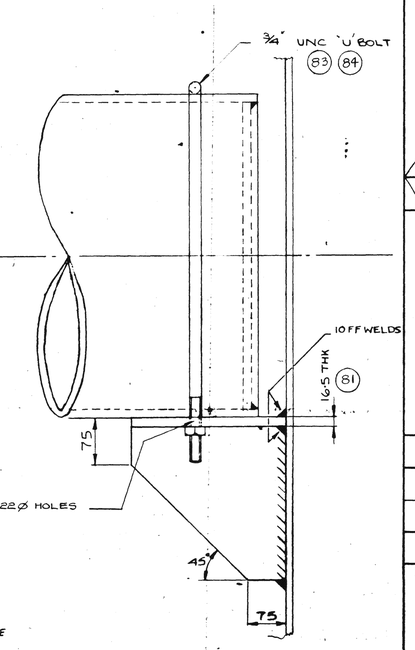

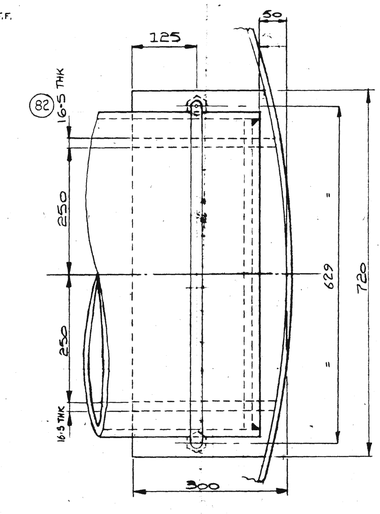

AIR INLET PIPE SUPPORT DETAILS

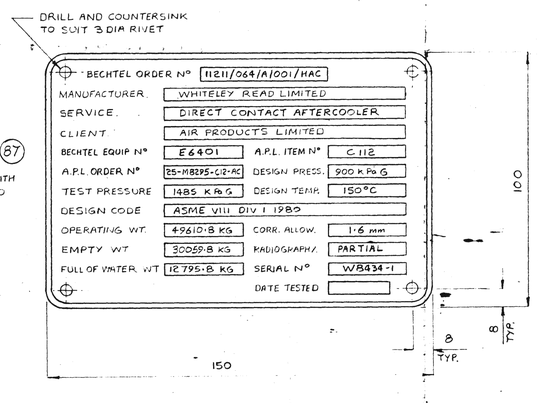

NOTES

PLT MAT^L ST.ST. (3 THK) (87)
RIVETS ST. ST.
PLATE TO BE POLISHED WITH LETTERING ENGRAVED AND FILLED IN BLACK.

DETAILS OF NAMEPLATE AND BRACKET

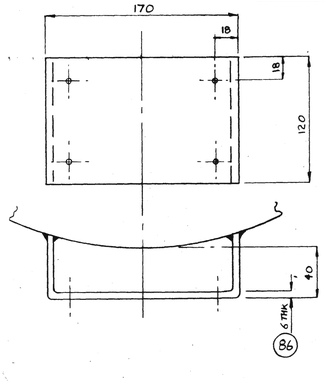

V.R. 11211-064-A-001-AC
EQUIP. NO. E-6401

(1) Work May Proceed.
(2) Revise and Resubmit. Work May Proceed Subject to Incorporation of Changes Indicated.
(3) Revise and Resubmit. Work May Not Proceed.
(4) Review Not Required. Work May Proceed.

DATE RECEIVED 8/15/82

IMPORTANT: Permission to proceed does not constitute acceptance or approval of design details, calculations, analyses, test methods or materials developed or selected by the supplier and does not relieve supplier from full compliance with contractual obligations.

DWG. STATUS
SIGNED
DATE 8/24/82
BECHTEL HOUSTON

APL VPC REFERENCE	A	CODE	EQUIP. No.
M8295 C12AC011	2	5	C112

DESIGN SPECIFICATION

VESSEL DESIGNED AND CONSTRUCTED IN STRICT ACCORDANCE WITH
DESIGN PRESSURE (INTERNAL) (EXTERNAL)
DESIGN TEMPERATURE (INTERNAL) (EXTERNAL)
M.A.W.P. UNCORRODED AT DES. TEMP. LIMITED BY
RADIOGRAPHED SHELL HEADS
JOINT EFFICIENCY SHELL HEADS
HYDRAULIC TEST PRESSURE CORROSION ALLOW.

WELDING SPECIFICATION

PRE WELD HEAT TREATMENT
POST WELD HEAT TREATMENT
WELD PROCEDURE NUMBER

MATERIAL SPECIFICATION

SHELL PLATES
HEAD PLATES
REINFORCING PLATES
NOZZLE NECKS
MANWAY NECKS
FLANGES
FLANGE BOLTING
SKIRT
FEET
NON PRESSURE PARTS
GASKETS TEST SERVICE
WELDING MATERIAL

GENERAL NOTES

VESSEL TO BE OF ALL WELDED CONSTRUCTION. ALL WELDS TO BE FULL AND HIGH DRESSED TO PRESENT A NEAT FINISHED APPEARANCE. ALL THREADS TO BE GREASED AND ALL SOCKETS FITTED WITH PLASTIC PLUGS UNLESS OTHERWISE STATED. ALL NOZZLE FACES TO BE BLANKED FOR TRANSIT. ALL NOZZLE HOLES POSITIONED OFF CENTRES UNLESS OTHERWISE STATED. MACHINE WHERE MARKED THUS ▽. ALL WELD DIMENSIONS GIVEN ARE LEG / THROAT DIMENSIONS.

PAINT OR OTHER FINISH

INTERNAL
EXTERNAL

VESSEL STAMPING

WHITELEY READ ENGINEERS LIMITED NOTTM. ENGLAND.
W.R.E. SERIAL No.
CUSTOMERS ORDER No.
VESSEL ITEM No.
M.A.W.P. AT
RADIOGRAPHED
POST WELD HEAT TREATMENT
CODE OF CONSTRUCTION
HYDRAULIC TEST PRESSURE
YEAR BUILT
INSPECTORS REF

WEIGHTS	INSPECTION
EMPTY	
OPERATING	
TEST	

WHITELEY READ ENGINEERS LTD
BASFORD NOTTINGHAM

TITLE C112
DETAILS FOR DIRECT CONTACT AFTERCOOLER

DRAWN	W.G. Morris	DATE	21/10/81
CHECKED		DATE	
CUSTOMER	AIR PRODUCTS LIMITED		

A REVISED TO SUIT CUSTOMERS COMMENTS WGM 5/8/82

REF. No. W8434
DRG. No. 8434/2 A

064-A-001-1945

8295 - 601A

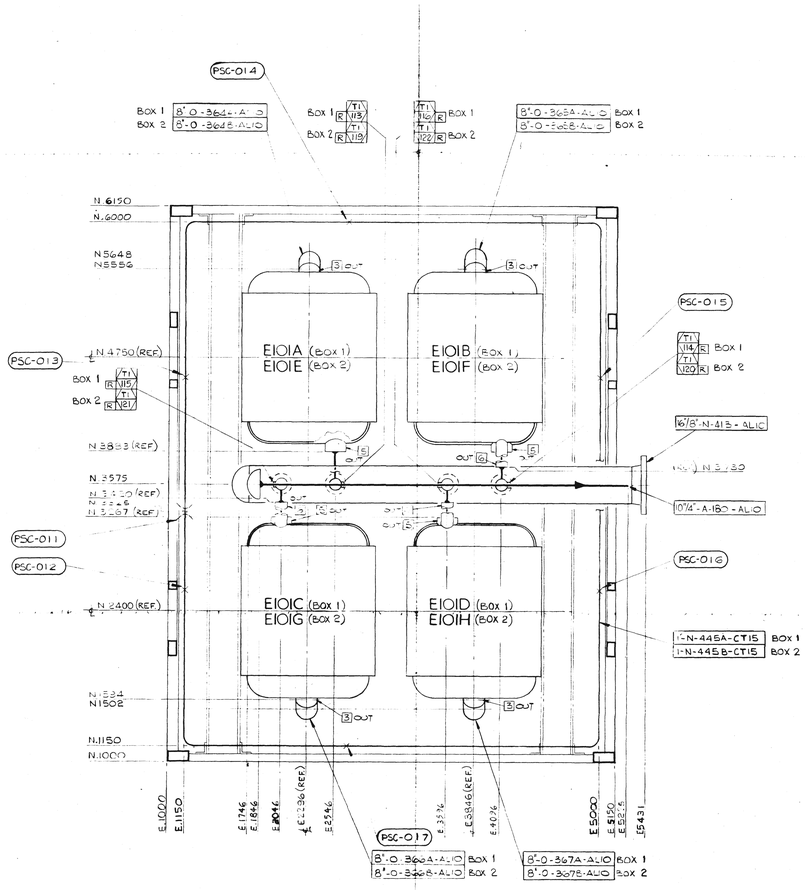

PLAN EL.107700 TO EL.103480

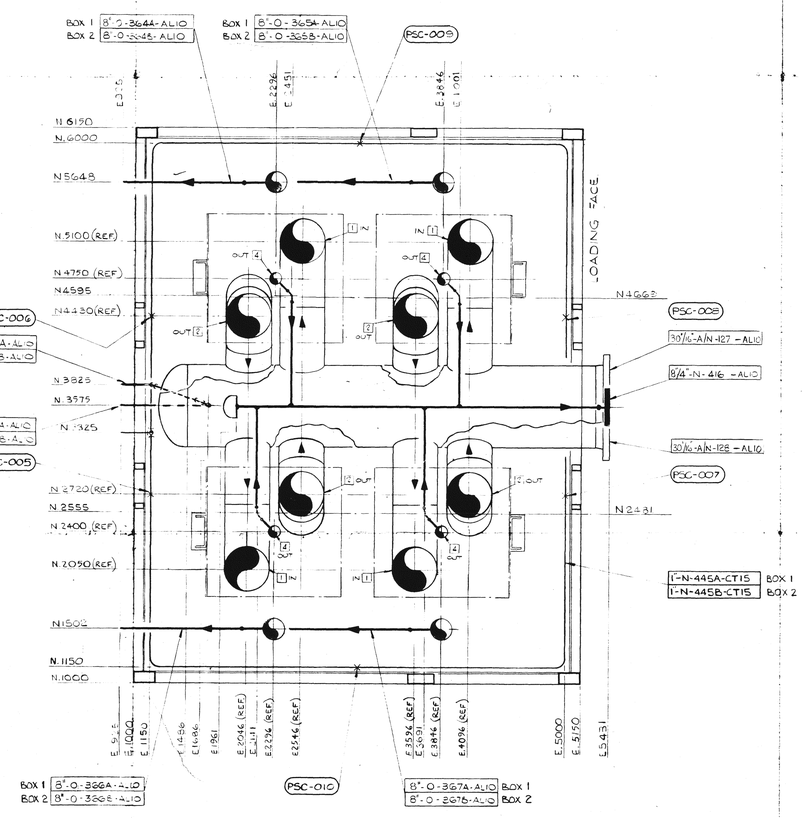

PLAN EL.103480 TO EL.100000

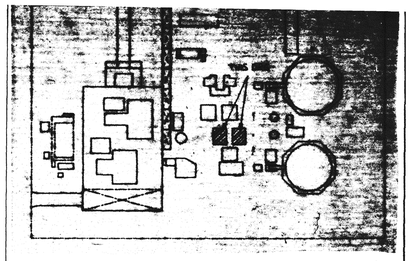

KEY PLAN

REFERENCE DRAWINGS

DRG NO	TITLE
8295-6010	HEAT EXCHANGER BOX PIPING ISOMETRIC

FOR ALL OTHER REFERENCE DRAWINGS SEE RELEVANT DRAWING REGISTER

FOR GENERAL NOTES SEE DRAWING 8295-6010 SHT 1

NOTES:-

1) LINE Nos TO BE SUFFIX A IN BOX 1
2) LINE Nos TO BE SUFFIX B IN BOX 2
3) ELEVATIONS ON THIS DRAWING ARE TO APL'S DATUM 100.000 m WHICH IS EQUAL TO 100.500 m PLANT SITE ELEVATION (HUNTING SURVEY 5.25 m)

REV.	DATE	DESCRIPTION	BY	CHK	PROJ. ENGR.	PROJ. MGR.	APPD
0	02-09-86	AS BUILT CONDITION					

☐ (1) Work May Proceed.
☐ (2) Revise and Resubmit, Work May Proceed Subject to Incorporation of Changes Indicated.
☐ (3) Revise and Resubmit, Work May Not Proceed.
☒ (4) Review Not Required, Work May Proceed.

DATE RECEIVED 7/20/82

IMPORTANT: Permission to proceed does not constitute acceptance or approval of design details, calculations, analyses, test methods or materials developed or selected by the supplier and does not relieve supplier from full compliance with contractual obligations.

DWG. STATUS SIGNED: [illegible] DATE: 1/31/83 BECHTEL HOUSTON

HO-10008 (8/78)

V.R.— 11211-D64-A-001-AR-1357 0

EQUIP. NO. E-6402 A-H

REV	ECN	REVISIONS	DATE	DRAWN	CHKD	APPD
0	—	ORIGINAL ISSUE	4-2-82	JGS	TGV	[illegible]

HEAT EXCHANGER BOX PIPING PLANS

YANBU SAUDI ARABIA

Air Products

DRAWN: J.G.S. DATE: 8-11-81
CHECKED: TGV SCALE: 1:20
APPROVED: [illegible]

DRG NO. 8295-601A

SHEET 2 OF 2

BECHTEL
HOUSTON
SAUDI YANBU
PETROCHEMICAL COMPANY
W/R 11211-04-A-1
DWG NO.

0 1000 2000mm

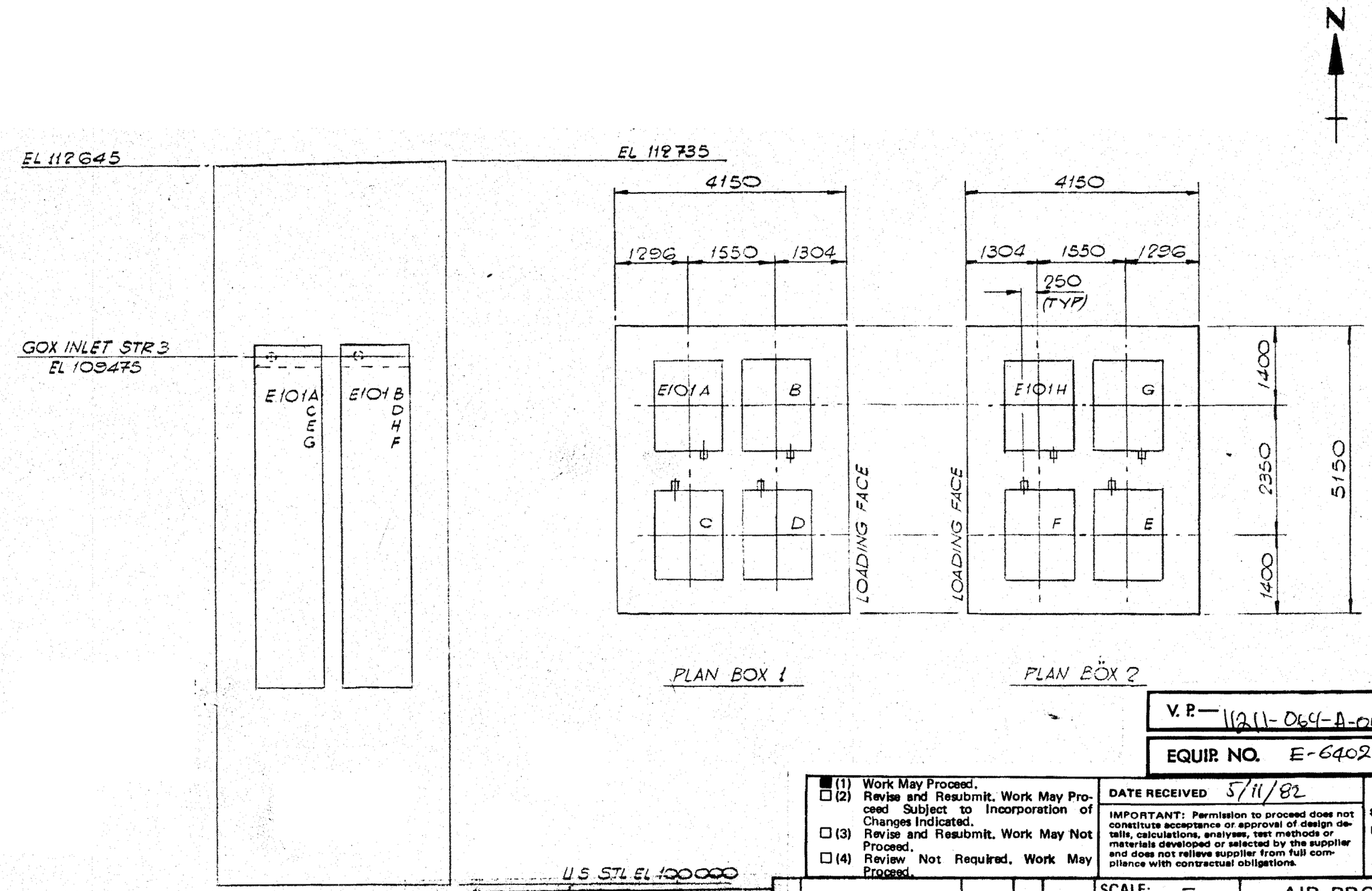

NOTES

1- APL DATUM ELEVATION 100.000 M = PLANT SITE ELEVATION 100.500 M (HUNTING SURVEY EL. 5.25M).

BECHTEL
HOUSTON
SAUDI YANBU
PETROCHEMICAL COMPANY
M/R 11211-64-A-1
DWG NO.

V. P. — 11211-064-A-001AC

EQUIP. NO. E-6402 A-H

(1) Work May Proceed.
(2) Revise and Resubmit. Work May Proceed Subject to Incorporation of Changes Indicated.
(3) Revise and Resubmit. Work May Not Proceed.
(4) Review Not Required. Work May Proceed.

DATE RECEIVED 5/11/82

IMPORTANT: Permission to proceed does not constitute acceptance or approval of design details, calculations, analyses, test methods or materials developed or selected by the supplier and does not relieve supplier from full compliance with contractual obligations.

DWG. STATUS
SIGNED
DATE 5/20/82
BECHTEL HOUSTON

HO-90808 (9/76)

No.	DESCRIPTION	DATE	BY	CHK.
O	ORIGINAL ISSUE	4-2-82	TGV	
P	PRELIMINARY ISSUE	23-10-81	TGV	

REVISIONS

SCALE: —
DRAWN: T.G.V.
CHECKED:
APPROVED:
DATED 4-2-82

AIR PRODUCTS LTD.

HEAT EXCHANGER BOX

EQUIPMENT ARRANGEMENT

DRAWING No. 8295-600D

SHEET 1 OF 1

27701

7030-7300A

THIRD ANGLE PROJECTION

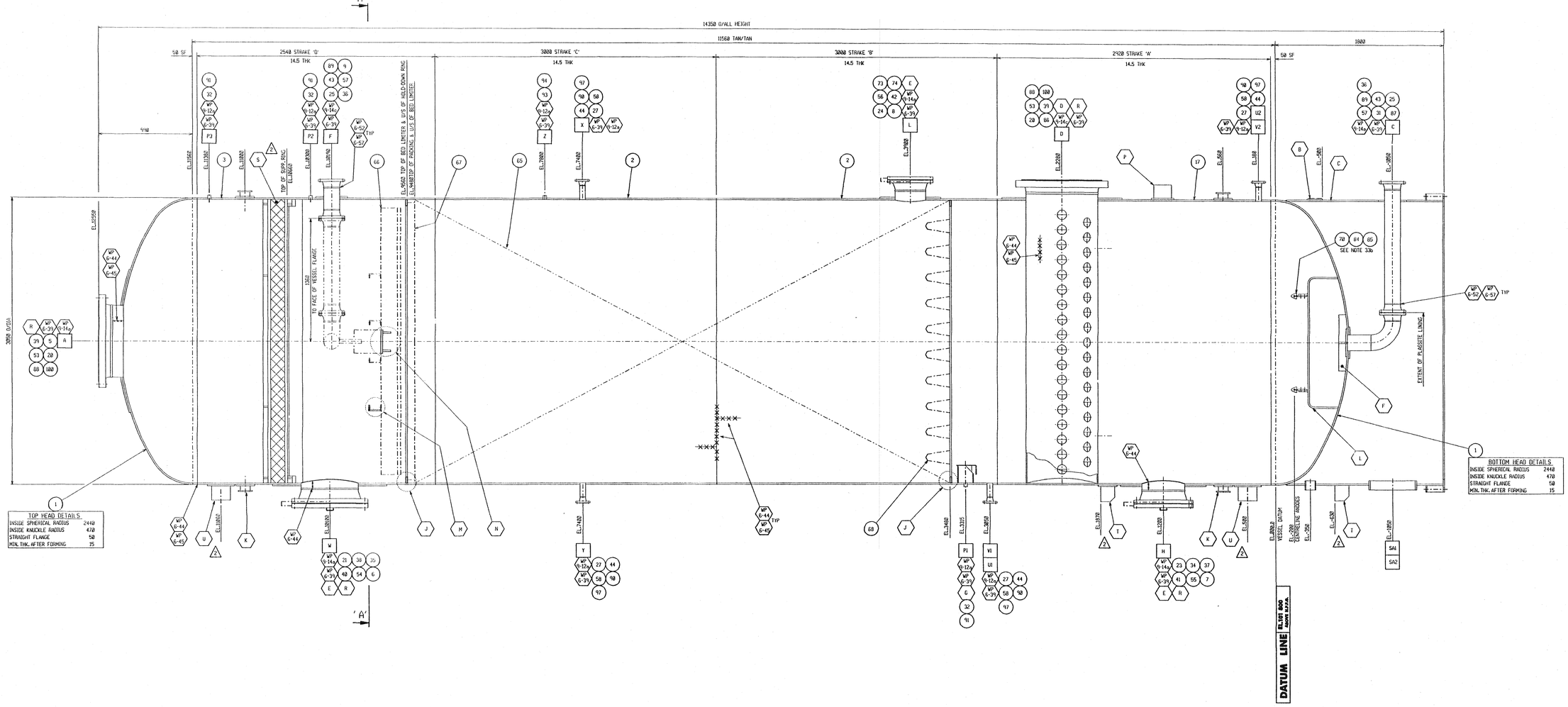

NOTES		UNITS	DCAC VESSEL
1	DESIGN CODE. A.S.M.E. VIII DIV 1 EDITION 1989 (WITHOUT 'U' STAMP)		
2	WORKING FLUID.		H2O & AIR
3	OPERATING PRESSURE. AT +13 TO +41.8°C	kPaG	711
	AT		
4	EXTERNAL LOADS		WIND, SEISMIC
5	LIQUID HEAD	—	———
6	DESIGN PRESSURE CALCULATING	kPaG	900
7	DESIGN TEMPERATURE	°C	+5 TO +121
8	CORROSION ALLOWANCE	mm	3 INSIDE
9	STRESS RELIEF	—	N/A
10	RADIOGRAPHY — LONG SEAMS AND TEES		100%
	RADIOGRAPHY — CIRC SEAMS		10%
11	JOINT EFFICIENCY — LONGITUDINAL		1
	JOINT EFFICIENCY — CIRCUMFERENTIAL		0.8
12	M.A.W.P. (AT TOP OF VESSEL) — NEW AMBIENT TEMP.	kPaG	1164
	M.A.W.P. (AT TOP OF VESSEL) — CORRODED AT	kPaG	923
	M.A.W.P. (AT TOP OF VESSEL) — STAMPED ON NAMEPLATE	kPaG	900
13	MAX. ALLOWABLE TEMP	°C	+121
14	MIN. ALLOWABLE TEMP	°C	+5
15	MIN. ALLOWABLE INTERNAL PRESSURE	kPaG	0
16	HYDRAULIC TEST PRESSURE	kPaG	1702 (17.02 Bar-G)
17	PNEUMATIC TEST PRESSURE	—	———
18	LEAK TEST PRESSURE	—	———
19	TESTING PROCEDURE	—	———
20	INSPECTION BY — AIR PRODUCTS		YES
	INSPECTION BY — INSPECTING AUTHORITY		PLANT SAFETY
	INSPECTION BY — CUSTOMER		YES
21	NAMEPLATE STAMPED TO		DETAIL A
22	INSPECTION AUTHORITY STAMP		YES
23	INTERNAL TREATMENT		M2 -PLASSITE LINED
24	EXTERNAL TREATMENT		M24-TABLE 2
25	HYDROGEN DECONTAM. PROCEDURE		NONE
26	WEIGHT EMPTY	Kg	20839
27	WEIGHT OF CONTENTS — INTERNALS	Kg	3194
	WEIGHT OF CONTENTS — WATER (OPERATING)	Kg	17533
28	TOTAL OPERATING WEIGHT	Kg	41366
29	TOTAL WEIGHT FULL OF WATER	Kg	113477
30	INTERNAL VOLUME	M3	97.644

NOTES (CONTINUED)

WELDING

31 a. ALL WELDERS TO BE QUALIFIED IN ACCORDANCE WITH ASME IX.

b. WELD SYMBOLS TO BS499 PT.2.

c. ALL FILLET WELD SIZES ARE LEG LENGTHS IN ACCORDANCE WITH WP-6F.

d. REFER TO WELD PROCEDURES FOR WELD GAPS. GAPS SHOWN ON DRAWING ARE FOR REFERENCE ONLY.

e. PRODUCTION TEST PLATES ARE NOT REQUIRED.

INSPECTION

32 a. ALL FINISHED PRESSURE WELDS NOT RADIOGRAPHED ARE TO BE DYE PENETRANT CRACK DETECTED. THIS INCLUDES ALL NOZZLE ATTACHMENTS, COMPENSATION PADS.

b. ALL TEES MUST BE RADIOGRAPHED, BUT MAY BE INCLUDED IN THE LONG. AND CIRC. SEAM AGGREGATE RADIOGRAPH REQUIREMENT.

GENERAL

33 a. PAINT VESSEL PROJECT & SECTION No. M7030-E-6421 ON VESSEL IN 100mm HIGH LETTERS.

b. ITEMS 70,84 & 85 TO BE FITTED AFTER PLASSITE LINING HAS BEEN COMPLETED.

c.

d. REMOVE ALL BURRS & SHARP EDGES.

e. DIMENSIONS IN MATERIAL LIST ARE FINISHED SIZES & DO NOT INCLUDE ANY TRIMMING OR ROLLING ALLOWANCE.

f. ALL PRESSURE RETAINING MATERIAL THICKNESSES STATED ON THE DRAWING ARE THE MINIMUM REQUIRED FOR PRESSURE.

g. ALL PIPE LENGTHS GIVEN IN THE MATERIAL LIST ARE FOR REFERENCE ONLY. EXACT LENGTHS TO BE DETERMINED ON ASSY.

h. FLANGE BOLT HOLES TO STRADDLE VESSEL CENTRE LINE.

i. REINFORCING PADS TO HAVE ¼" NPT PLUGGED TELL-TALE HOLES (USING ITEM 92).

j. THE VESSEL SHALL BE SHIPPED UNPRESSURISED WITH ALL OPENINGS COVERED WITH PRESSURE TEST FLANGES SECURELY FASTENED AND SEALED ADEQUATE TO PROTECT THE VESSEL FROM SEA SPRAY.

k. SPREADER BEAMS TO BE USED AT ALL TIMES WHEN LIFTING VESSEL.

NOTES (CONTINUED)

INTERNAL LINING

34 a. ALL INTERNAL WELDING TO BE CONTINUOUS AND TO A SMOOTH CONTOUR, AND ALL WELD SPLATTER MUST BE REMOVED. WELDING TO BE GROUND TO A SMOOTH CONTOUR WHERE NECESSARY.

b. INTERNALLY ALL SHARP EDGES TO BE REMOVED TO APPROX. 3mm RADIUS, INCLUDING THE INTERNAL CORNER OF FLANGE GASKET FACES.

c. ALL THREADED HOLES TO BE PLUGGED.

d. ALL SURFACE PREPARATION (EXCEPT GRIT-BLASTING) SHALL BE COMPLETE BEFORE CARRYING OUT DYE PENETRATION OR HYDRAULIC TESTING.

e. AFTER DRYING OUT, ALL INTERNAL SURFACES SHALL BE GRIT-BLASTED TO SA3. FLANGE GASKET FACES SHALL BE PROTECTED FROM GRIT-BLASTING.

f. VESSEL TO BE LINED WITH PLASSITE 7156 (COLOUR IVORY) MIN TWO MULTIPASS SPRAY COATS WITH HAND BRUSHING WHERE REQUIRED. APPLIED STRICTLY IN ACCORDANCE WITH THE MANUFACTURERS INSTRUCTIONS, TO A THICKNESS OF 250-300 MICRONS.

g. THE LINING TO OVERLAP THE GASKET FACE BY 2mm MAX.

h. THE COMPLETED LINING MUST BE SUBJECTED TO A "HOLIDAY" SPARK TEST AT 1kV. ANY PIN HOLES MUST BE RECTIFIED UNTIL A SATISFACTORY TEST IS ACHIEVED.

NOZZLE SCHEDULE

VESSEL DATUM = PLANT DATUM + 101800

NOZZLE	SIZE	END PREP	SERVICE	OUTSTAND FROM VESSEL ℄	EL FROM PLANT BASE DATUM	PIPE O/D & WALL THICKNESS THRU SHELL	COMP.PAD	TEST BLANK PCN THICKNESS	HOLE DIA IN SHELL
A	30"NB	150#RF	AIR OUTLET	SEE DRG	114350	762 X 14.5	1478 X 14.5	----	765
C	6"NB	150#RF	WATER OUTLET	1725	102750	168.3 X 10.97	305 X 14.5	----	171
D	30"NB	150#RF	AIR INLET	1725	104868	762 X 14.5	1280 X 14.5	----	765
F	6"NB	150#RF	CHILLED WATER INLET	1725	111950	168.3 X 10.97	305 X 14.5	----	171
H	18"NB	150#RF	MANWAY OPENING	1725	103800	457.2 X 14.5	914 X 14.5	----	460
L	12"NB	150#RF	PACKING DUMP	1725	105700	323.9 X 17.46	578 X 14.5	----	327
P1	¾"NB	NPT	PRESSURE CONNECTION	1555	105115	35	---------	----	38
P2	¾"NB	NPT	PRESSURE CONNECTION	1555	112100	35	---------	----	38
P3	¾"NB	NPT	PRESSURE CONNECTION	1555	113100	35	---------	----	38
U1	2"NB	150#RF	LEVEL TRANSMITTER CONNECTION	1725	104950	60.3 X 5.54	---------	----	63
U2	2"NB	150#RF	LEVEL TRANSMITTER CONNECTION	1725	109600	60.3 X 5.54	---------	----	63
V1	2"NB	150#RF	LEVEL SWITCH CONNECTION	1725	104850	60.3 X 5.54	---------	----	63
V2	2"NB	150#RF	LEVEL SWITCH CONNECTION	1725	109800	60.3 X 5.54	---------	----	63
W	24"NB	150#RF	MANWAY OPENING	1725	111900	609.6 X 14.5	1173 X 14.5	----	613
SAL2	20"NB	----	SKIRT ACCESS	----	100750	508 X 6.35	---------	----	511
X	2"NB	150#RF	WATER INLET (HYDRO TEST)	1725	107200	60.3 X 5.54	---------	----	63
Y	2"NB	150#RF	WATER OUTLET (HYDRO TEST)	1725	107200	60.3 X 5.54	---------	----	63
Z	1"NB	NPT	VENT (HYDRO TEST)	1555	107600	45	---------	----	48

YPT-10106-002 SHEET 1 OF 3

REV.	ECN NO.	ZONE	REVISION DESCRIPTION	DATE	DRAWN	CHK'D	APPD.
4	19802	---	SEE ECN	11/1/91	SI	SGS	[illegible]
3	18914	---	SEE ECN	3/10/91	RJF	SI	ACL
2	18924	---	SEE ECN	26/9/91	SI	ACL	JEW
1	------	---	ISSUED FOR MANUFACTURE	22/8/91	RJF	SI	ACL
0	------	---	ORIGINAL ISSUE FOR METHODISING	29/7/91	RJF	SI	ACL

DRAWING SYMBOLS: A NOZZLE IDENTIFICATION; A DETAIL REFERENCE; 18 ITEM NUMBER; WP 1-18 WELD PROCEDURE

TITLE: DIRECT CONTACT AFTERCOOLER C212 (E-6421) △3

TOLERANCE: ALL DIMENSIONS IN mm UNLESS SHOWN OTHERWISE. LINEAR ± 3.0; HOLE LOCATION ± 0.8; ANGULAR ±0.25°; HOLE SIZE +0.4

AIR PRODUCTS, HERSHAM, SURREY

DWG NO. 7030-7300A

A0

SCALE 1:15 | VESSEL FILE No. M7030-E-6421 | SHEET 1 OF 3

YPT-10106-02 SH 1 OF 3

NOZZLE CONNECTIONS

DESCRIPTION	KEY	SIZE(IN)	OUTSTAND FROM ℄	ELEVATION	FACING	OVERALL THICKNESS	O/D	DRILLING
COOLING WATER INLET	A	6	1850	10600	FF	34mm	11"	8No HOLES ø7/8" ON 9-1/2" PCD
WASTE GAS INLET	B	30	1850	2807	FF	35mm	38-3/4"	28No HOLES ø1-3/8" ON 36" PCD
CHILLED WATER OUTLET	C	6	1850	316	FF	34mm	11"	8No HOLES ø7/8" ON 9-1/2" PCD
OVERFLOW OUTLET	D	6	1850	166	FF	34mm	11"	8No HOLES ø7/8" ON 9-1/2" PCD
MANWAY	H1	20	1850	1920	FF	32mm		
MANWAY	H2	20	1850	10582	FF	32mm		
LEVEL TRANS CONNS	J1	2	1850	2126	FF	19mm	6"	4No HOLES ø3/4" ON 4-3/4" PCD
LEVEL TRANS CONNS	J2	2	1850	906	FF	19mm	6"	4No HOLES ø3/4" ON 4-3/4" PCD
LEVEL GAUGE CONNS	U1	1-1/2	1850	2276	FF	17mm	5"	4No HOLES ø5/8" ON 3-7/8" PCD
LEVEL GAUGE CONNS	U2	1-1/2	1850	176	FF	17mm	5"	4No HOLES ø5/8" ON 3-7/8" PCD
LEVEL SWITCH CONNS	V1	2	1850	1316	FF	19mm	6"	4No HOLES ø3/4" ON 4-3/4" PCD
LEVEL SWITCH CONNS	V2	2	1855	166	FF	19mm	6"	4No HOLES ø3/4" ON 4-3/4" PCD
TANK DRAIN	E	1-1/2 NPT	1750	75	THREADED WITH PLUG			

ALL FLANGES TO BE FLAT FULL FACED SUITABLE FOR CONNECTION TO ANSI B 16.5 CLASS 150.

ALL NOZZLES UPTO AND INCLUDING 6"N.B. ARE PVC FULL FACED FLANGES COMPLETE WITH STEEL BACKING RINGS.

ALL NOZZLES ABOVE 6"N.B. ARE GRP FULL FACED FLANGES TYPE B TO BS 4994.

ALL FLANGES TO BE DRILLED OFF CENTRES.

COLOUR : WHITE WITH U/V INHIBITOR IN OUTER LAYERS.

DESIGN : DESIGN CODE BS4994 1987 CATEGORY 2
DESIGN PRESSURE 0.35 BAR G + 1500 mmWG.
WIND LOAD ANSI A58.1 (95 Km/HR)
DESIGN TEMPERATURE +66°C -20°C
EARTHQUAKE LOADING UBC 1982 ED. (ZONE 1)

MATERIALS OF CONSTRUCTION.

SHELL GRP (SCOTT BADER 397 PA MAIN STRUCTURAL RESIN WITH GEL COAT EXTERIOR FINISH)
DISTRIBUTION UPVC/GRP/STAINLESS STEEL
PACKING PVC (DF121)
PACK SUPPORT GRID GRP COVERED REDWOOD TO BS4978 GRADE M75
BED LIMITER GRP/POLYPROPYLENE
BIRD SCREEN GRP
NOZZLES PVC/GRP
DRIFT ELIMINATOR PVC - BRENTWOOD CD-20
ALL GASKETS 6mm THICK NEOPRENE (60-70 SHORE HARDNESS)
EXTERNAL BOLTS SHERADISED MILD STEEL
INTERNAL BOLTS STAINLESS STEEL

DETAIL DRAWING Nos

40-078/4 - DETAIL OF CONICAL & DISTRIBUTION SECTION
40-078/5 - DETAIL OF PACKING SECTION
40-078/6 - DETAIL OF BASE SECTION

NOTE!
10% EXTRA OF ALL EXTERNAL BOLTS REQUIRED

FOUNDATION SURFACE UNDER TOWER TO BE STEEL FLOAT FINISHED SMOOTH. BEFORE ERECTING TOWER, FOUNDATION SURFACE TO BE SWEPT CLEAN OF ANY LOOSE STONES, etc.
TOWER TO STAND ON 2 LAYERS OF BITUMASTIC FELT 3mm THICK LAID OVER AREA OF BASE OF TOWER (FELT SUPPLIED BY DECo.)

SHIPPING WEIGHT 7050 Kg.

OPERATING WEIGHT 23230 Kg.

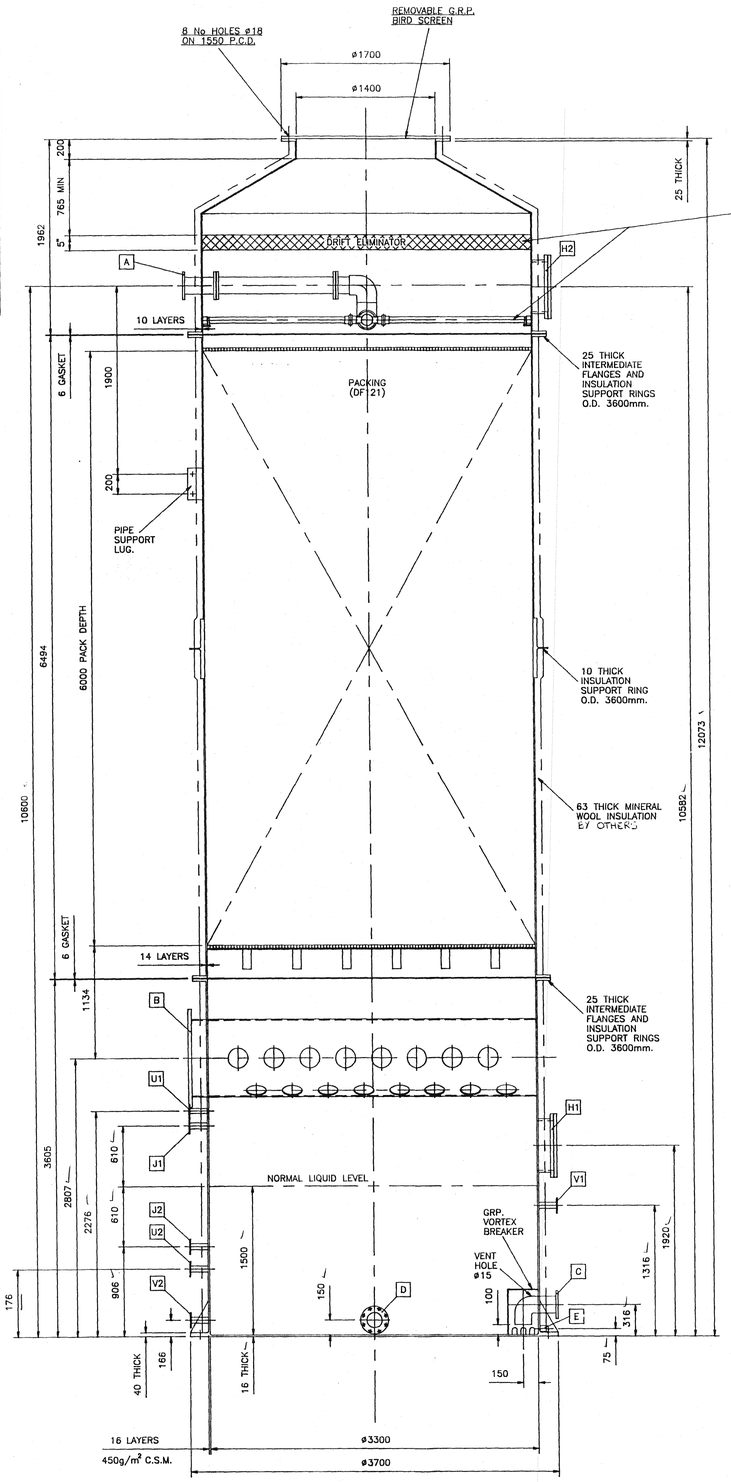

NOTE!
DISTRIBUTION SYSTEM & DRIFT ELIMINATOR TO BE REMOVABLE THROUGH MANWAY H2

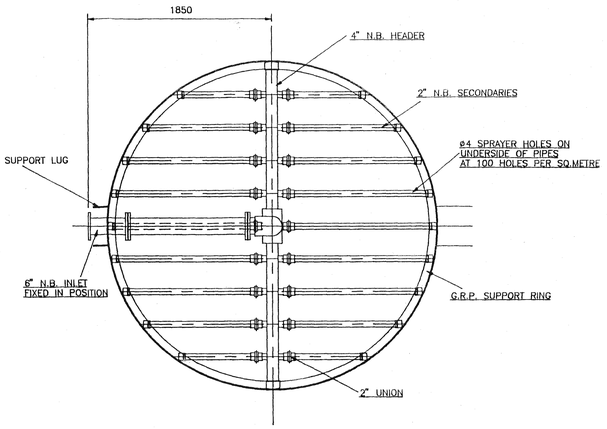

PLAN ON DISTRIBUTION

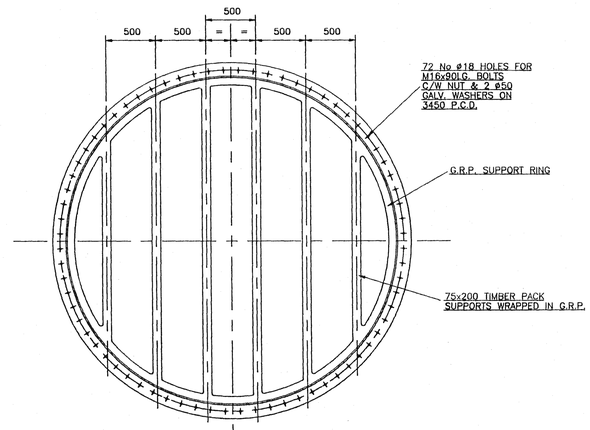

PLAN ON PACK SUPPORTS

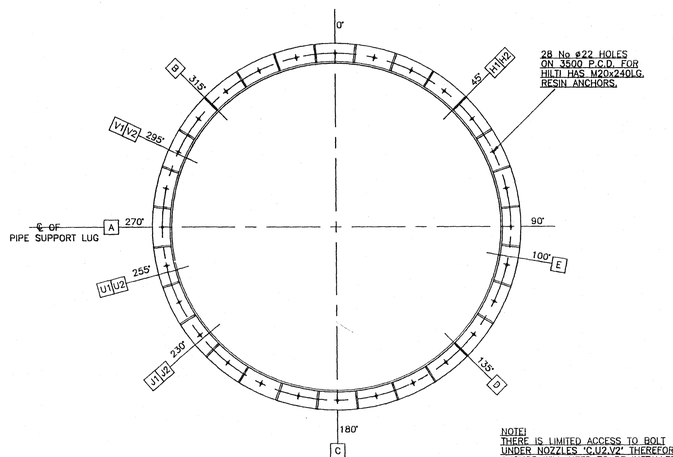

NOTE!
THERE IS LIMITED ACCESS TO BOLT UNDER NOZZLES 'C,U2,V2' THEREFORE ANCHOR WILL NEED TO BE INSTALLED PRIOR TO POSITIONING OF TOWER.

PLAN SHOWING NOZZLE ORIENTATION & BASE RING DETAILS

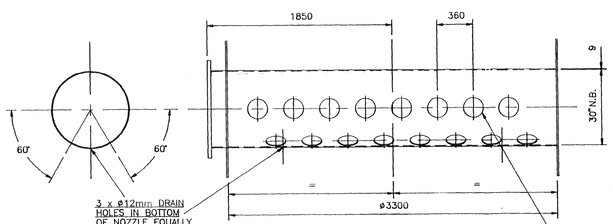

NOZZLE 'B' DETAILS

YPT-10106-011 SHEET 1 OF 1

DAVENPORT ENGINEERING CO. LTD.							
TITLE G.A.WASTE CHILLER TOWER-SAUDI ARABIA (NOMINALLY 3300 I/D 12073 HIGH)							
CUSTOMER AIR PRODUCTS (UK) LTD							
DRAWN BY SWT	SCALE 1:20	DATE 02/07/91	A	EYEBOLTS REMOVED, BASE RING GUSSETS ADDED AND BOLT HOLES NOW ON CENTRES, PLUS VARIOUS MODS.-CLIENTS REQUEST	24-7-91	SWT	
APPROVED BY	DRG.No 40-078/1	REV A					

V-215
(E-6422)

YPT-10106-11 SH 1 OF 1

BOLTS INDICATED BY AN ARROW ARE PROVIDED WITH BEARING BOXES AND ARE TO BE USED FOR OPENING AND CLOSING THE UNIT.

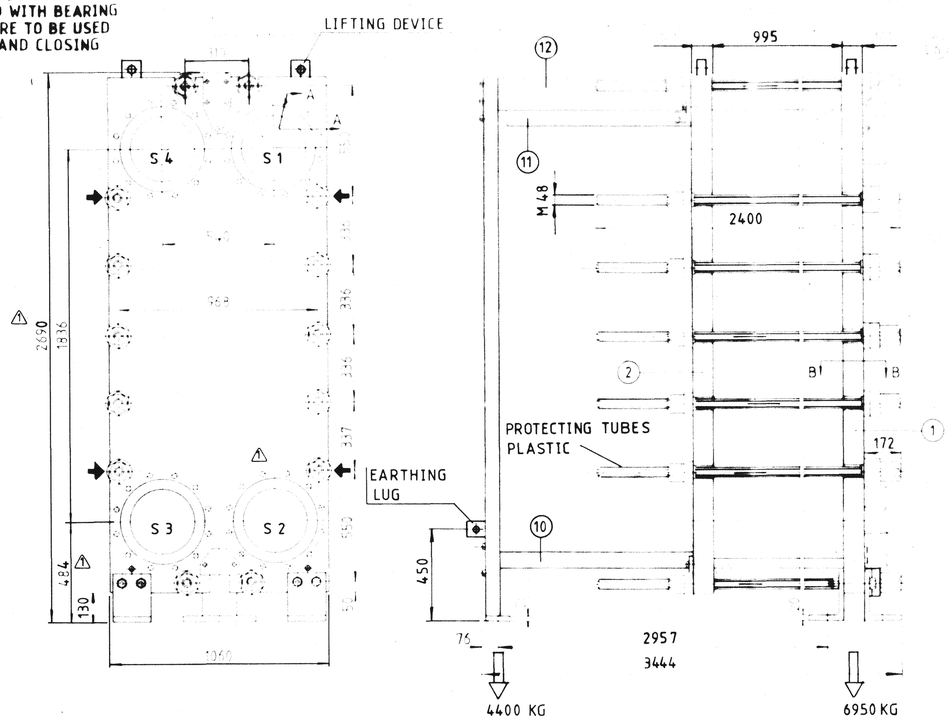

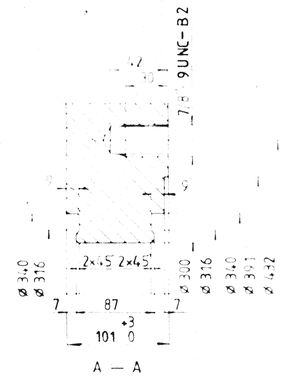

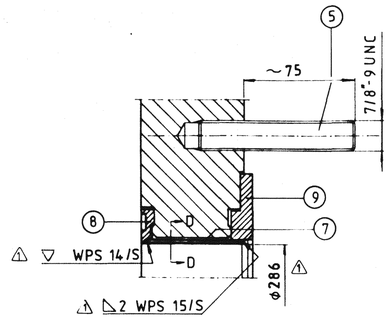

S1,S2,S3,S4

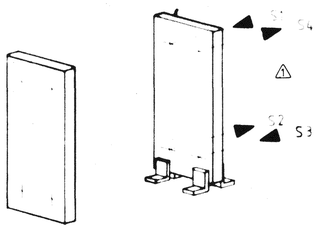

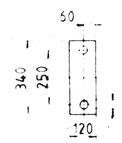

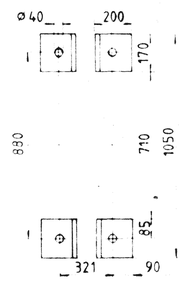

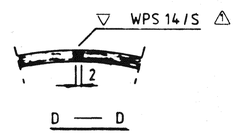

D — D

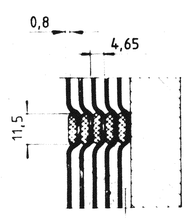

B—B

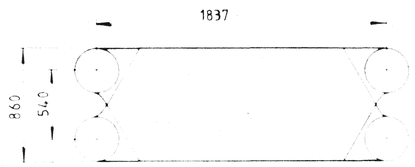

PRESSURE LOAD AREA	17620 cm²
LENGTH OF GASKET	10370 mm

AIR, THE FRAME PARTS ARE NOT IN CONTACT WITH THE FLOWING LIQUIDS

"THE PLATE HEAT EXCHANGER MEETS THE REQUIRERMENTS ACCORDING TO UNI-FORM BUILDING CODE ZONE 1 AND SPEC. A-10

ALLOWABLE NOZZLE LOADS (ON EACH NOZZLE):

F_x	3000 N
F_y	7000 N
F_z	20000 N
M_x	10000 Nm
M_y	4000 Nm
M_z	6000 Nm

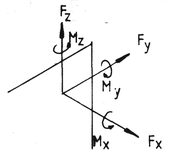

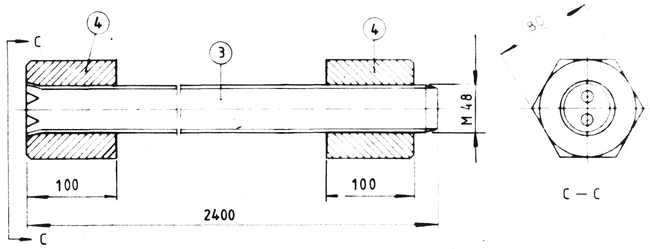

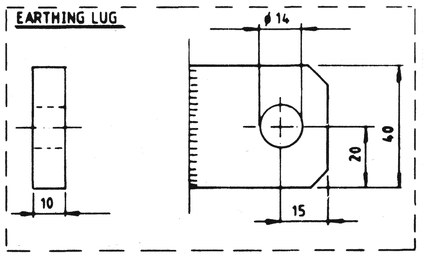

Rev.	Revision	Date	Rev. by	Appr.
1	Various changes	820830		

THIS HEAT EXCHANGER IS MANUFACTURED BY ALFA-LAVAL AB

DESIGN SPECIFICATIONS: DS-E-7405, A-10, A-11, W-1, X-1

DESIGN CODE: ASME VIII, DIV. I

DESIGN PRESSURE: 1500 KPA (GAUGE)

DESIGN TEMP: 150 °C

INITIAL AND ROUTINE HYDROSTATIC TEST PRESSURE: 2250 KPA

MIN. TEMP OF WATER FOR HYDROSTATIC TEST: 16 °C

CORROSION ALLOWANCE: 0 mm

CONNECTION: SEAM WELD X-RAY, OTHER WELDS LIQUID PENETRANT EXAMINATION

HEAT TREATMENT: NONE

WEIGHT EMPTY / FILLED WITH WATER: 7300 8700 kg

OPERATING WEIGHT: 8700 kg

TOTAL LIQ. [illegible]: 1400 l

214 PLATES 0,8 mm AISI 316

GASKET: NITRILE

CARRYING BARS: A.C. AT [illegible] 311 PLATE 1446 MM PLATE PACK

TIGHTENING BOLTS: CALCULATED [illegible] 257 PLATE 1195 MM PLATE PACK

PAINTING SPECIFICATION ACC. TO. X-1 DRWG. 000-EX-001

SIDE	PRIMARY	SECONDARY
MEDIUM	FRESH WATER	FRESH COOLING WATER
FLOWRATE	96,1 KG/S	132,8 KG/S
TEMP. INLET/OUTLET	46 - 35 °C	33,3 - 42 °C
PRESSURE DROP	35 KPA	62 KPA
CONNECTION INLET/OUTLET	S3 - S4	S1 - S2
CONNECTIONS MATERIAL	SA 182 - F 316 L / SA 240 - 316 L	
CONNECTION SIZE	12" ANSI B 16.5 150# RF	

ITEM	QTY	DENOMINATION	GRADE	STANDARD	CERT
12	1	CARRYING BAR SUPPORT	SIS 1412-00	eq to ASTM A 283 Grade C e D	
11	1	CARRYING BAR PROFILE	SIS 2332-02	AISI 304	
10	1	GUIDING BAR LINED WITH STAINLESS STEEL	SIS 1412-00 SIS 2332-02	eq. to ASTM A283 Gr. C e D AISI 304	
9	4	FLANGE	SA 182-F316 L	-	CMTR
8	4	GASKET RING	SA 182-F316 L	-	CMTR
7	4	TUBE	SA 240-316 L	-	CMTR
6	214	PLATES	SA 240-316	-	CMTR
5	48	STUDBOLT	SA 193 - B7	-	CMTR
4	28	NUT	SB 150 - 630	-	CMTR
3	14	TIGHTENING BOLT	AFNOR Z6 CNUD 15.04	-	CMTR
2	1	PRESSURE PLATE	SA 516 - 60	-	CMTR
1	1	FRAME PLATE	SA 516 - 60	-	CMTR

APPROVED

- (1) Work May Proceed.
- (2) Revise and Resubmit. Work May Proceed Subject to Incorporation of Changes Indicated.
- (3) Revise and Resubmit. Work May Not Proceed.
- (4) Review Not Required. Work May Proceed.

DATE RECEIVED

IMPORTANT: Permission to proceed does not constitute acceptance or approval of design details, calculations, analyses, test methods or materials developed or selected by the supplier and does not relieve supplier from full compliance with contractual obligations.

DWG. STATUS

SIGNED

DATE

BECHTEL PETROLEUM, INC.

Alfa-Laval AB
Lund, Sweden
CERTIFIED FINAL
Date 820927
Sign.

V.P.- 11211-074-E-40C-LAC-1A

EQUIP. NO. E-7405

ALFA-LAVAL	ORDER NO. T 121907 (TO. NO. 319071) PLATAGE SPECIFICATION NO. 30100-13040 ED. 2 MANUFACTURING NO. 30100-13040
ALFA-LAVAL REPRESENTATIVE	REF
MAIN CONTRACTOR	BECHTEL HOUSTON JOB NO. 11211 ITEM NO. E-7405 PO. NO. 11211-074-E-40C-LAC
CUSTOMER	SAUDI YANBU PETROCHEMICAL COMPANY

ALFA-LAVAL

TYPE	MAX. WORK. PRESSURE (GAUGE)	
AX30-HA	1500 KPa	15 bar
MANUF. NO.	MAX. WORK. TEMPERATURE	
30100-13040	150 °C	302 °F
YEAR / VOLUME		
1982 / 1400 l	ITEM NO. E-7405	
	PO. NO. 11211-074-E-40C	

AX 30 - HA
DESIGN AND ARRANGEMENT DRAWING

ALFA-LAVAL
LUND SWEDEN

Scale	Dept	Drawn	Checked	Appr.	Date	Drawing	Rev
—	TSC	PC	820630	820630	820622	32297-0423	1

74-E-40-1

Products

TANK PROCESS DATA SHEET

SHEET 1 OF 2

Client Bechtel | Plant 700 MT/D A.S.U. | Project No. M8295

NOTE: TANK CONNECTIONS - ALL SUPPLIED PIPE WILL BE PER THIS DWG. PLEASE ADD FACING & RATING DATA FOR THESE CONNECTIONS.

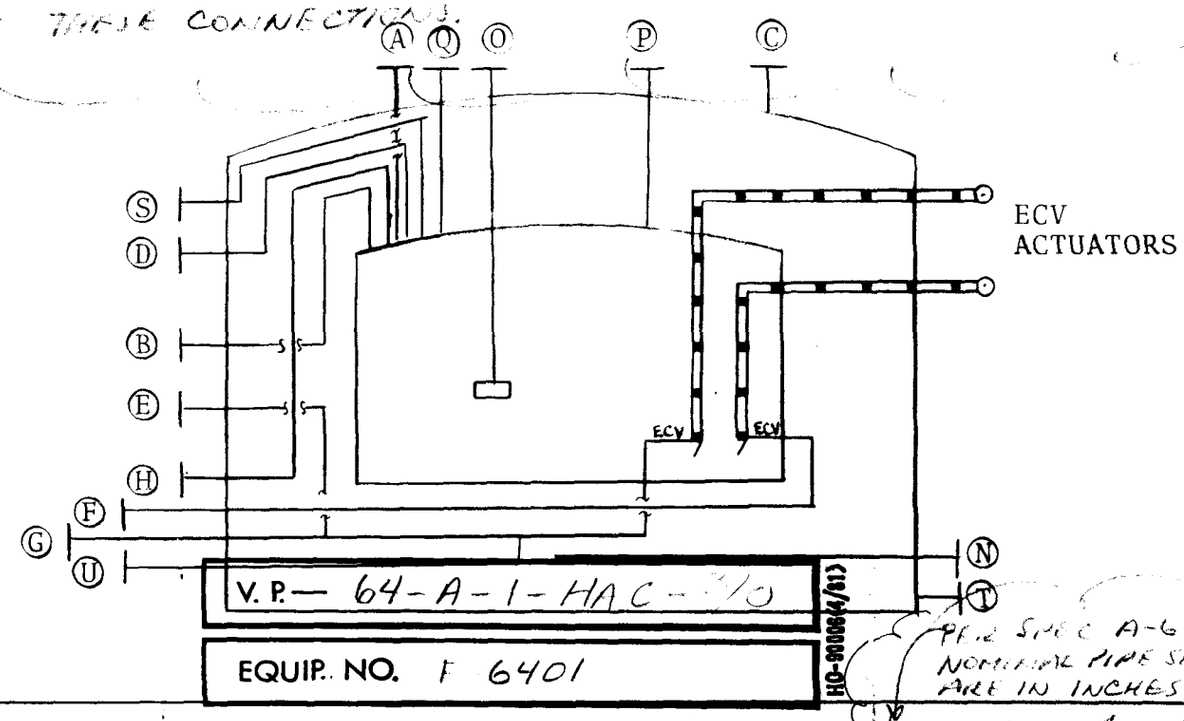

PER SPEC A-6 NOMINAL PIPE SIZES ARE IN INCHES

	PRESSURE	Units	TEMPERATURE	Units
NORM. OP	101.3	kPa(A)	-183	°C
DESIGN	13.8	kPa(G)	-196 / +50	°C

NOTES:-

1. NORMAL OPERATING PRESSURE AND DESIGN PRESSURE ARE IN THE VAPOUR SPACE
2. ATMOSPHERIC PRESSURE = 101.3 kPa(A)
3. BECHTEL TO DEFINE TANK VACUUM DESIGN PRESSURE

NOZZLES	Tag	SIZE (mm)	No. OFF	RATING	FACING
PRESSURE RELIEF CONN.	A	200	ONE		
VENT / PRESSURISING CONN	B	100	ONE		
OUTER SHELL PSV CONN.	C	•	ONE		
U.L.L. / P. ALARM CONN.	D	25	ONE		
L.L.L. CONNECTION	E	25	ONE		
SPARE OUTLET	F	100	ONE		
PRODUCT OUTLET	G	100	ONE		
PRODUCT INLET	H	50	ONE		
	I		PLEASE CONFIRM		
	J		SIZE. P&ID SHOWS		
	K		3" LINE TO TANK.		
	L				
	M				
PURGE GAS CONN.	N	50	ONE		
MECH. L.L. GAUGE	O	250	ONE		
PRESSURE RELIEF CONN.	P	200	ONE		
PUMP RECYCLE CONN.	Q	75	ONE		
	R				
PIC / P GAUGE CONN.	S	25	ONE		
PURGE PILOT TAPPING	T	25	ONE		
P.B.U. CONNECTION	U	40	ONE		
	V				
	W				
	X				
	Y				

☒ (1) Work May Proceed.
☐ (2) Revise and Resubmit. Work May Proceed Subject to Incorporation of Changes Indicated.
☐ (3) Revise and Resubmit. Work May Not Proceed.
☐ (4) Review Not Required. Work May Proceed.

DATE RECEIVED

IMPORTANT: Permission to proceed does not constitute acceptance or approval of design details, calculations, analyses, test methods or materials developed or selected by the supplier and does not relieve supplier from full compliance with contractual obligations.

DWG. STATUS
SIGNED C. Ruggles
REF. DWGS.
DATE 9-30-81
BECHTEL HOUSTON

HO-900801(4/81)

PROJECT No. M8295
No. OFF: ONE
ITEM: L.P. LOX STORAGE
ITEM No.: T101

Issue	Description	By	Proc. App.	Date	Des. App.	Date	Proj. App.	Date
0	ORIGINAL	KR.	BB	5Jun81				

F585/A

PROJECT : M8295 BECHTEL

ITEM : T101 LOX STORAGE

NOTES : 1. GROSS VOLUME = 1365 M^3 MINIMUM (THIS INCLUDES 5% VAPOUR SPACE)

NET CAPACITY = 1480 MT LOX
LOX DENSITY = 1137 KG/M^3

2. BECHTEL TO SPECIFY MECHANICAL DETAILS OF TANK

3. TANK VENDOR TO DEFINE HEAT LEAK INTO TANK, EXPRESSED AS A PERCENTAGE OF TANK CONTENTS PER DAY.

4. DETAILS OF INSTRUMENTATION ASSOCIATED WITH THE TANK AND TO BE SUPPLIED BY BECHTEL WILL BE SHOWN ON THE P & ID. (REV. 0 ISSUE DUE 26 JUNE 1981)

5. THE BASE OF THE INNER TANK MUST BE 3.5 METRES ABOVE GRADE FOR OPERATION OF THE LOX PRODUCT PUMP G101.

6. BECHTEL TO SPECIFY SIZE OF NOZZLE. Ⓒ

7. THE SIZES OF NOZZLES Ⓐ AND Ⓟ WILL BE CONFIRMED BY BECHTEL'S TANK PRESSURE RELIEF DEVICE VENDOR AFTER TANK PRESSURE RELIEF DEVICES HAVE BEEN SPECIFIED BY APL.

8. NOZZLE SIZES REFER TO PENETRATIONS OF THE INNER TANK EXCEPT NOZZLES Ⓒ Ⓝ & Ⓣ WHICH PENETRATE THE OUTER SHELL ONLY

Issue	Description	By	Proc. App.	Date	Des. App.	Date	Proj. App.	Date
0	ORIGINAL ISSUE	WR	BB	5 Jun 81				

Project No: M8295
No. Off: ONE
Item: LP LOX STORAGE
Item No: T101

FS87/B

Section
Schnitt E-F

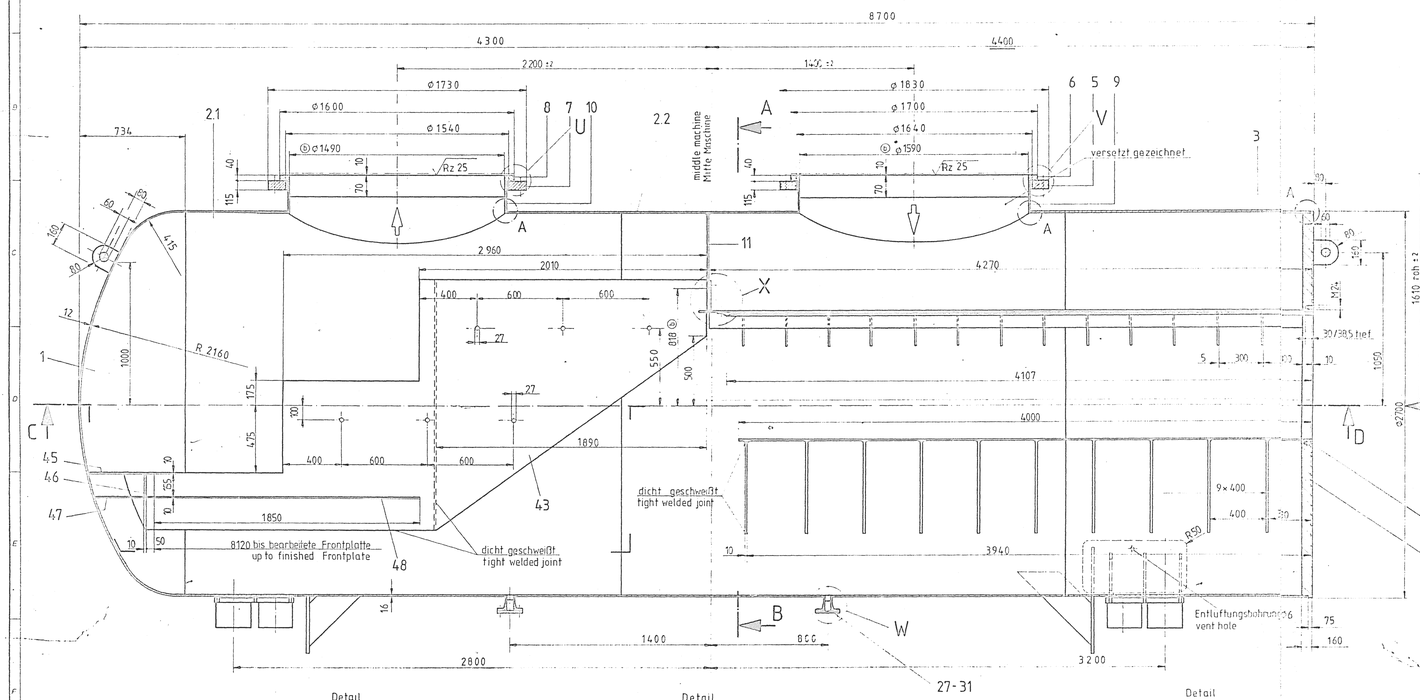

Section
Schnitt A-B

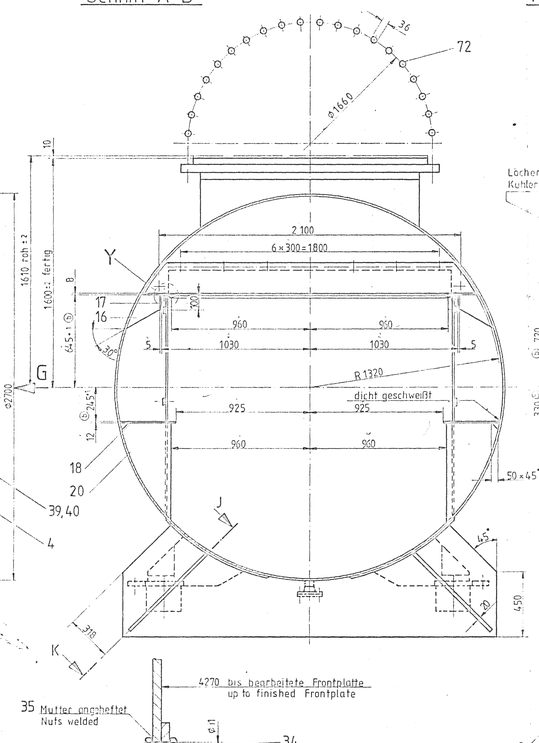

View
Ansicht G

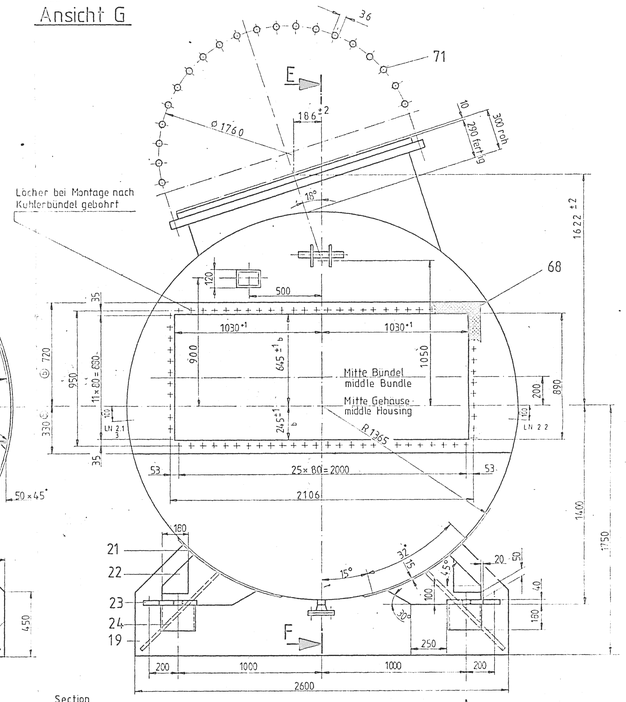

Detail
Einzelheit U
M 1:2,5

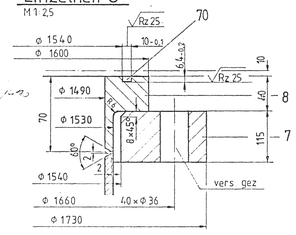

Detail
Einzelheit V
M 1:2,5

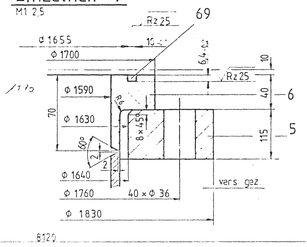

Detail
Einzelheit W
M 1:2,5

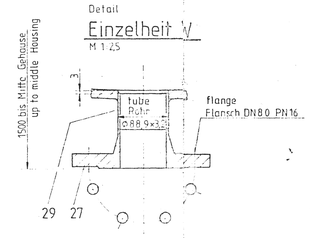

Section
Schnitt C-D

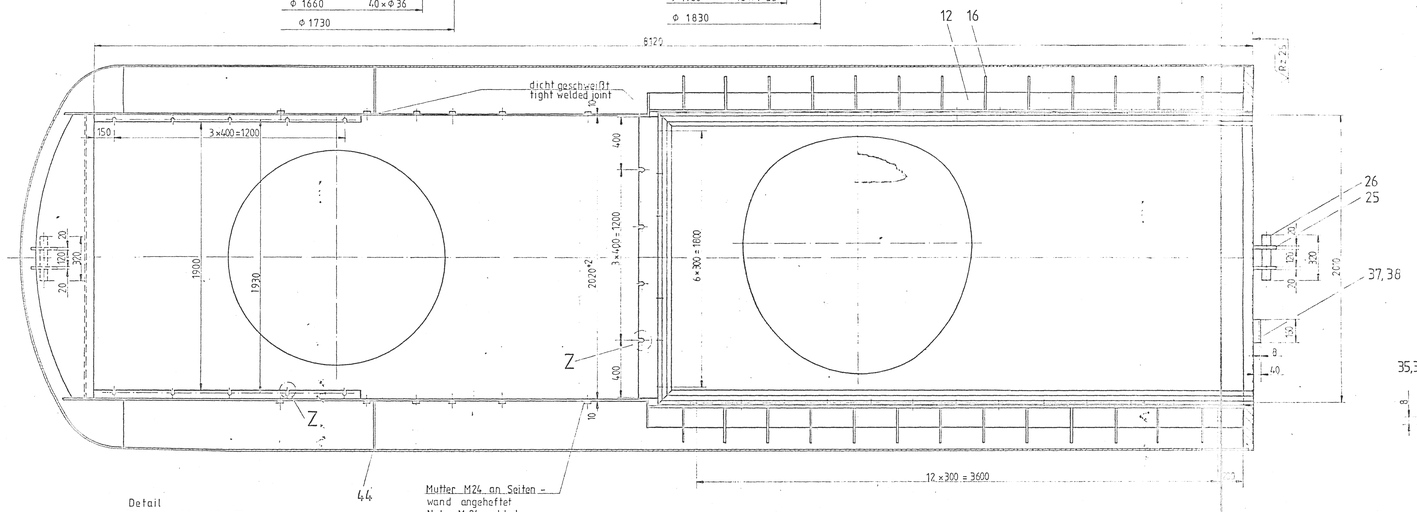

Detail
Einzelheit Z
M 1:1

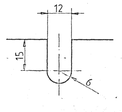

Detail
Einzelheit X
M 1:2,5

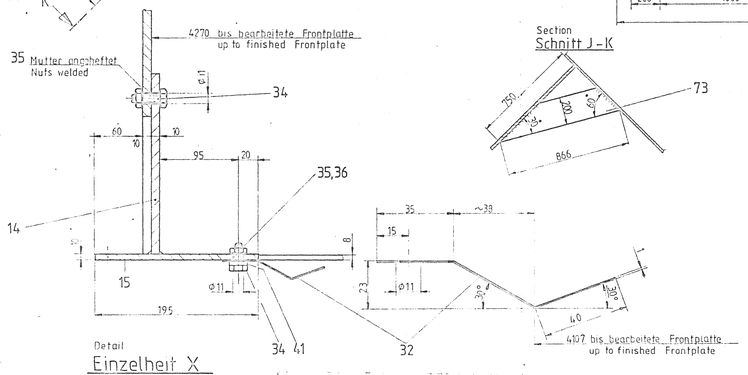

Section
Schnitt J-K

View
Ansicht H

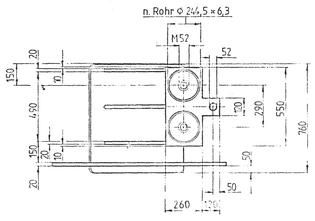

Rundnaht
Boden-Mantel
circular seam
bottom-shell

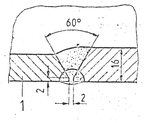

Rund- und Langsnahte
Mantel
circular- and longitudinal seam
shell

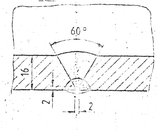

Einzelheit: A
Detail.

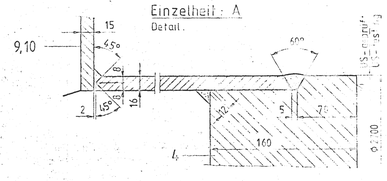

Detail
Einzelheit Y
M 1:2,5

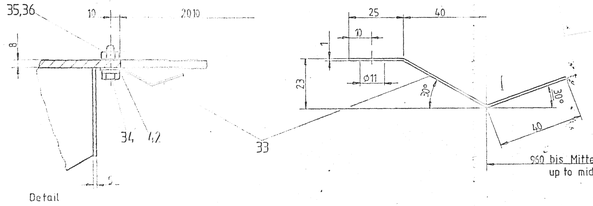

~ (√Rz 25)

Schweißverfahren E Hand, MAG, UP
Method of welding : Manual electric welding MAG
Submerged arc welding

Ausnutzung der zul. Berechnungs-spannung in der Schweißnaht
Welding factor : 0.85

Glühen : spannungsarm
Annealing : stress relieving

Schweißzusatzwerkstoff
Elektrodes :

Röntgen: 5%
x-ray:

E 51 22 RR 6 Finnord T
E 43 33 AR 7 Citanord
Carbofil 1
S 2, P 230

2331 2655		5276	530	795	130	Luft/Air	47300	DDV	TÜV	ASME
DEMAG Auftrag Nr.:	Maschinen Nr.	Fabrik Nr.	zul. Betr. überdruck ~ BTa:	Prüfdruck ~ bPa	Betriebs-temperatur °C	Beschickungs mittel	Inhalt L	Abnahme nach	Abnahme durch	Berechnung nach
DEMAG Order Nr.	Machine Nr.	Manufacture Nr.	Operating pressure	Test pressure	Operating temperature	Fluid Circulating	Capacity	Design Code	Inspector	Calculation

Zeichnung Nr.: 0-1102
Kom.Nr.: 1321

V.R.— 1321 0-04 A-231-AC
EQUIR NO. K-6601-E1

Fabr.	Blatt	Änderungsnummer	Datum	Name	Benennung	Cooler Stage 1 / ZW Kühler Stufe 1	Maßstab 1:15 1:25 1:1
Ersatz für	Ersetzt durch						
Datum	Name	Benennung	Gepruft	Normung			
		Benennung	Gepruft	Normung			
Datum	20.10.61		5.11.61				
Name							
Sach Nr.		Projekt	1072	Werkstoff		Fertigung	
		Ist					
					1.51.4.2.0.1.5.1.01		6-55-1

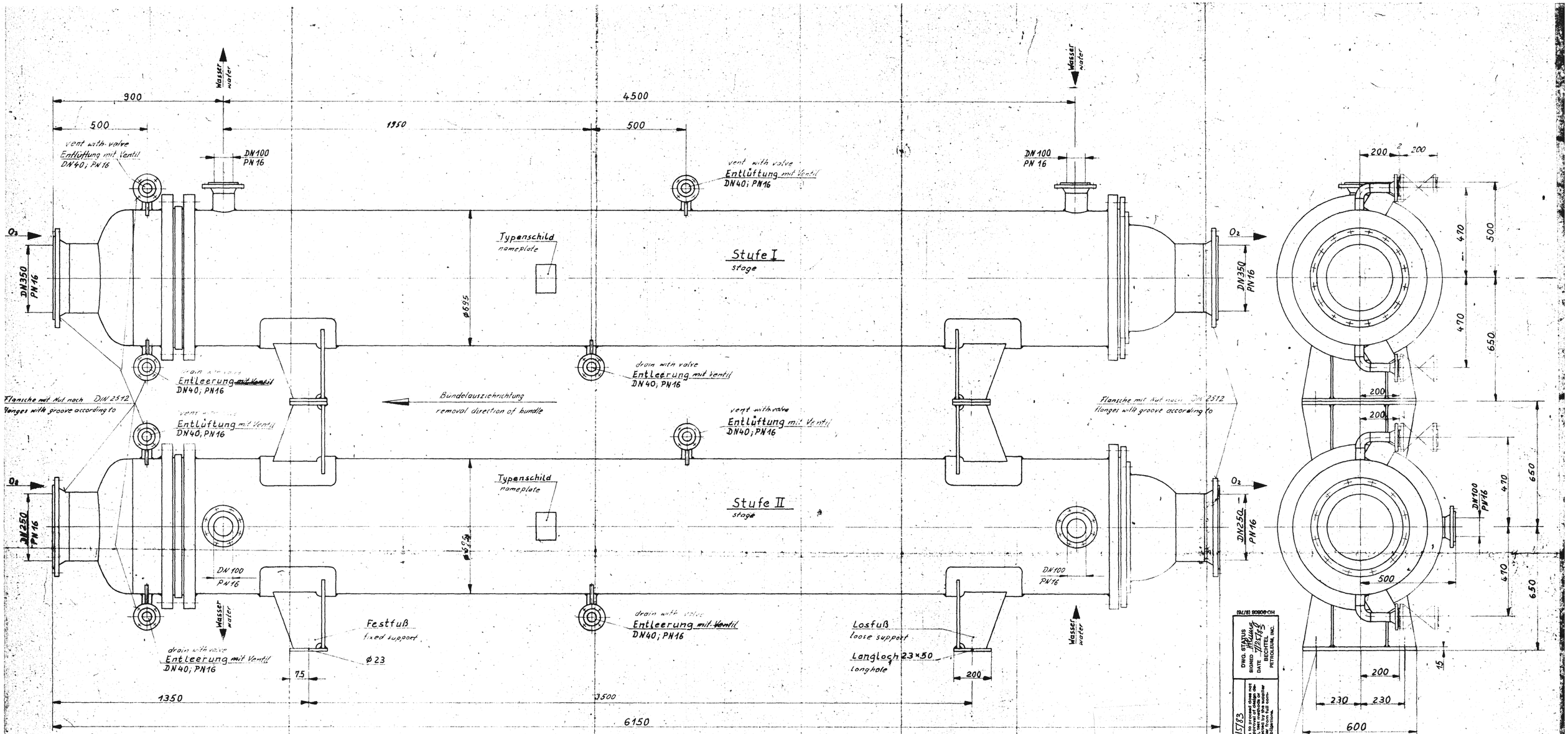

Gewichte/weights			
Kühler/cooler	Montagegewicht assembly weight	mit Wasserfüllung filled with water	Bündel bundle
Stufe I/stage I	3405 Kg	5335 Kg	1780 Kg
" I " II	3585 Kg	5375 Kg	1780 Kg

(92/8) 80808-OH

DWG. STATUS
SIGNED
DATE
BECHTEL PETROLEUM, INC.

DATE RECEIVED 7/15/83

IMPORTANT: Permission to proceed does not constitute approval of design, details, calculations, analyses, test methods or materials developed or selected by Contractor and does not relieve supplier from full compliance with contractual obligations.

☐ (1) Work May Proceed.
☐ (2) Revise and Resubmit. Work May Not Proceed. Incorporation of changes indicated.
☐ (3) Revise and Resubmit. Work May Not Begin.
☒ (4) Review Not Required. Work May Proceed.

DEMAG – Kennwort: Code word: APL-YANBU-O2

DEMAG – Auftrag-Nr: Order-Nr: 23214357

V. P. – 1611-064-A-001-LAC-1465/1

EQUIP. NO. K-6402-E1,2,3,4

MANNESMANN DEMAG

Ident-Nr. 14586815 | Form 1 | Rev. 1

Entstanden aus

APL VPC REFERENCE				CODE	EQUIP. No.
M8295	K02AC	049	3	5	K102

Ziffer	Ziffer kommt vor	Änderung	Tag	Name	Zugehörige Zeichnungen

Jahr 1981	Tag	Name
Gezeichnet	3.12	Schneider
Geprüft: Gesehen	5.1.82	[illegible]
Fertigung		
Normgeprüft		

HALBERG

Für diese Zeichnung behalten wir uns alle Rechte vor.

Oberfläche Reihe 2 DIN 3141 zul. max. Rauhtiefe in µm

~ beliebig	100	25	6.3	1

Entstanden aus
Ersatz für
Ersetzt durch
Holz- oder Werkst.
Fertig-Gewicht
Modell-Nr.

Maßstab 1:10

Sauerstoffkühler
O2 - COOLER

Typ R 355×5001's 105 W-S 12218/19.5

Stufe I u.II
stage

B700.52195

064-A-001-1465/1

Equipment	Material	Type	Additional	Dimension
C-5001	Alloy	Cold Box Column	No Data	Volume with Same Material
C-5002	Alloy	Cold Box Column	No Data	Volume with Same Material
C-6401	CS-1054C	Cold Box Column		3.150 M ID x 8.938 M H
C-6402	CS-1054C/CS-1055C	Cold Box Column		3.150 M ID x 11.828 M H
D-5011 A/B	CS	Dryer Drum		2.75 M x 2.6 M
D-6401A				
D-6401B				
D-6402	inner SEW 680-70* 8 NI 9	Double walled Drum		Outer (2.5 M OD, 8.362 M H) Inner (2.2 M, 6.58 M H)
D-6403	inner SEW 680-70* 8 NI 9	Double walled Drum		Outer (2.5 M OD, 4.9 M H) Inner (2.2 M, 3.98 M H)
D-6404		Cold Box drum		
D-6414				
D-6415	CS	Condensate Drum		0.6 M ID x 0.850 M H
D-6416	CS	Condensate Drum		0.6 M ID x 0.850 M H
D-6417 A/B		Dryer Drum		
E-212				
E-5001	Lined CS	Drum		1.6 M ID x 14.3 M H
E-5002 A/B	Aluminum	Cold Box Exchanger		
E-5003	Alloy	Cold Box Exchanger		
E-5007	Alloy	Cold Box Exchanger		
E-5015	GRP	Drum		1.7 M ID 8 M H
E-5021				
E-5025				
E-5031		Electrical Heater	275 kw	
E-5034		Electrical Heater	275 kW	
E-5083		Plate and Frame Heat Exchanger		
E-6401	SA-516-70	Drum		3.35m ID x 9.951 M H
E-6401 A-D	Aluminum	Cold Box Exchanger		
E-6401 E-H	Aluminum	Cold Box Exchanger		
E-6403	SB-211	Cold Box Exchanger		
E-6404 A-D	SB-209	Cold Box Exchanger		
E-6405	SA-53/249-304	Shell and Tube Heat Exchanger		
E-6406	SA-53/249-304	Shell and Tube Heat Exchanger		
E-6407	CS/SS	Vaporizer		
E-6409	SA-283/249/304	Vaporizer		
E-6410	SB-209	Cold Box Exchanger		
E-6412	SB-209	Cold Box Exchanger		
E-6414	Aluminum	Air Vaporizer		
E-6415	Aluminum	Air Vaporizer		
E-6418	Aluminum	Air Vaporizer		
E-6419	Aluminum	Air Vaporizer		
E-6420	Copper	Air Vaporizer		
E-6417		Electrical Heater	54kw	
E-6421		Drum		
E-6422				
E-6423		Electrical Heater	1000 kW	

E-6425		Shell and Tube Hx		
E-6426				
E-6442		Drum		
E-7405	SA-516-60	Plate and Frame Heat Exchanger		
F-6401	GRC/ASTM A-240 304 SS	Double walled tank		H) Inner (12.58 M ID x 11.1 M H)
F-6402	GRC/ASTM A-240 304 SS	Double walled tank		H) Inner (15.270 M ID x 17.664 M H)
G-5001 A/B		Pump		
G-5002 A/B		Pump		
G-6401RA/RB		Circulation Pump		
G-6402A/B		Liquid Oxygen Pumps		
G-6403A/B		Liquid Nitrogen pumps		
G-6406				
G-6407A/B				
G-6407A/B				
G-6408				
H-6401A				
H-6401B				
K-5001				
K-5001-E1	CS	Shell and Tube Heat Exchanger		
K-5001-E2	CS	Shell and Tube Heat Exchanger		
K-5001-E4 A/B	CS	Shell and Tube Heat Exchanger		
K-5001-E5		Electrical Heater	14 kW	
K-5001-E5-VF		FAN		
K-5001-G1 A/B		Lube Oile Pump		
K-5001-V1 A/B		Lube Oile Filer		
K-5002		Compressor and Motor	1053 kW	
K-5002-D1		Drum		
K-5002-D3		Drum		
K-5002-E1		Shell and Tube Heat Exchanger		
K-5002-E2		Shell and Tube Heat Exchanger		
K-5002-E3		Shell and Tube Heat Exchanger		
K-5002-E5A/B		Shell and Tube Heat Exchanger		
K-5002-G1 A/B		L.O Pump		
K-5002-V1 A/B		L.O Filter		
K-5004 A/B		Turbine		
K-5004-A-E1		Electrical Heater	3 kW	
K-5004A-E2A/B		Shell and Tube Hx		
K-5004A-G1 A/B		Lube Oil Pump		
K-5004A-V1A		Lube Oil Filter		
K-5004A-V1B		Lube Oil Filter		
K-5004A-V2		Lube Oil Filter		
K-5004A-V3		Lube Oil Filter		
K-5004-B-E1		Electrical Heater	3 kW	
K-5004B-E2A/B		Shell and Tube Hx		
K-5004B-V1 A/B		Lube Oil Filter		
K-5004B-V2		Lube Oil Filter		
K-5004B-V3		Lube Oil Filter		
K-6401	CS	Compressor	138000 M3	

K-6401-E1	CS	Shell and Tube Heat Exchanger		
K-6401-E2	CS	Shell and Tube Heat Exchanger		
K-6401-E3	CS	Shell and Tube Heat Exchanger		
K-6401-E4A	CS	Shell and Tube Heat Exchanger		
K-6401-E4B	CS	Shell and Tube Heat Exchanger		
K-6401-E5A/B		Electrical Heater	12 kw	
K-6401-E6				
K-6401-G1A/B		L.O Pump		
K-6401-GT1A		Turbine	22.5 kw	
K-6401-V1A		Lube Oile Filer		
K-6401-V1B		Lube Oile Filer		
K-6402		Oxygen Compressor		
K-6402-E1		Shell and Tube Heat Exchanger		
K-6402-E2		Shell and Tube Heat Exchanger		
K-6402-E3		Shell and Tube Heat Exchanger		
K-6402-E4		Shell and Tube Heat Exchanger		
K-6402-E5A/B		Shell and Tube Heat Exchanger		
K-6402-E6		Electrical Heater	9 kw	
K-6402-V1A/B		Lube Oile Filer & 4 L.O Pumpss		
KM-5001		Motor	4300 kW	
KM-5001-E1				
KM-5002				
KM-6401		MOTOR	15000 kW	
KM-6402		MOTOR	3500 kW	
PG-6401A		Expander Generator	434.5 kw	
PGT-6401A		Expander Turbine	24700 m3	
PGT-6401A-E1		Electrical Heater	6 kw	
PGT-6401A-E2		Shell & Tube HeatX		
PGT-6401A-G1A		Aux Lube Oil Pump		
PGT-6401A-G1B		Aux Lube Oil Pump		
PGT-6401A-V1A		Lube Oil Filter		
PGT-6401A-V1B		Lube Oil Filter		
PG-6401B		Expander Generator	434.5 kw	
PGT-6401B		Expander Turbine	24700 m3	
PGT-6401B-E1		Electrical Heater	6 kw	
PGT-6401B-E2		Shell & Tube HeatX		
PGT-6401B-V1A		Lube Oil Filter		
PGT-6401B-V1B		Lube Oil Filter		
V-5001		Inlet Filter		
V-5015		Filter		
V-5015-1		Filter		
V-6401K1	CS	Inlet Filter	5.5 kW	
Y-5003		Vent Siencer		
Y-5004		Vent Silencer		
Y-5006		Vent Silencer		
Y-5008		Vent Silencer		
Y-5011		Vent Siencer		
Y-5012		Vent Silencer		
Y-6401		Vent Silencer		
Y-6402		Vent Silencer		

Y-6404		Vent Siencer		
Y-6405-E1				
Y-6405-G1				
Y-6406-E1				
Y-6406-G1				
Y-6409-E1		Vent Silencer		
Y-6409-G1		Pump		
Y-6410		Vent Silencer		
Y-6411		Vent Silencer		
Y-6412		Vent Silencer		
Y-6413		Vent Silencer		
Y-6490		Vent Silencer		