sabic

ARABIAN INDUSTRIAL FIBERS COMPANY

IR-II AROMATICS PROJECT

PROJECT NO. 10E0541A01

DOCUMENT TITLE:

REFORMATE SPLITTER RECEIVER DATA SHEET

DOCUMENT NO:

DS-56-DA-502

REV	DESCRIPTION	BY	CHK.	APPR.	DATE
3	Revised as Marked	LSH	SYL	YSL	16-Nov-11
2	Revised as Marked	LSH	SYL	YSL	11-Aug-11
1	Issued for Design	LSH	SYL	YSL	26-Apr-11
0	Issue For Approval	LSH	SYL	YSL	9-Mar-11

ابن رشد ibn rushd

ARABIAN INDUSTRIAL FIBERS COMPANY YANBU, KINGDOM OF SAUDI ARABIA

CTCI CORPORATION

CERTIFIED

PROJ. MGR DATE

CLIENT DATE

PAGE 1 OF 2

XC32B-56-502

GN-502 84.10

CONTENTS

Attachment total 1 page.

ابن رشد ibn rushd FLUOR	HORIZONTAL VESSEL DATA SHEET	Contract: 10E0541A01		سابك sabic CTCI CORPORATION
		Equip. No.: 56-D-02		
		Revision : 3	Date : 14-Nov-2011	
		Unit : 56 - Sulfolane		
		P.O. No.:		
		Document No. : DS-56-DA-502		
		Sheet 1 of 2		

REV

Client:	Arabian Industrial Fibers Company	Plant:	Sulfolane
Service:	Reformate Splitter Receiver	Site:	Yanbu, Kingdom of Saudi Arabia

DESIGN SKETCH

VESSEL DIMENSIONS: ID: 3000 T/T: 9000

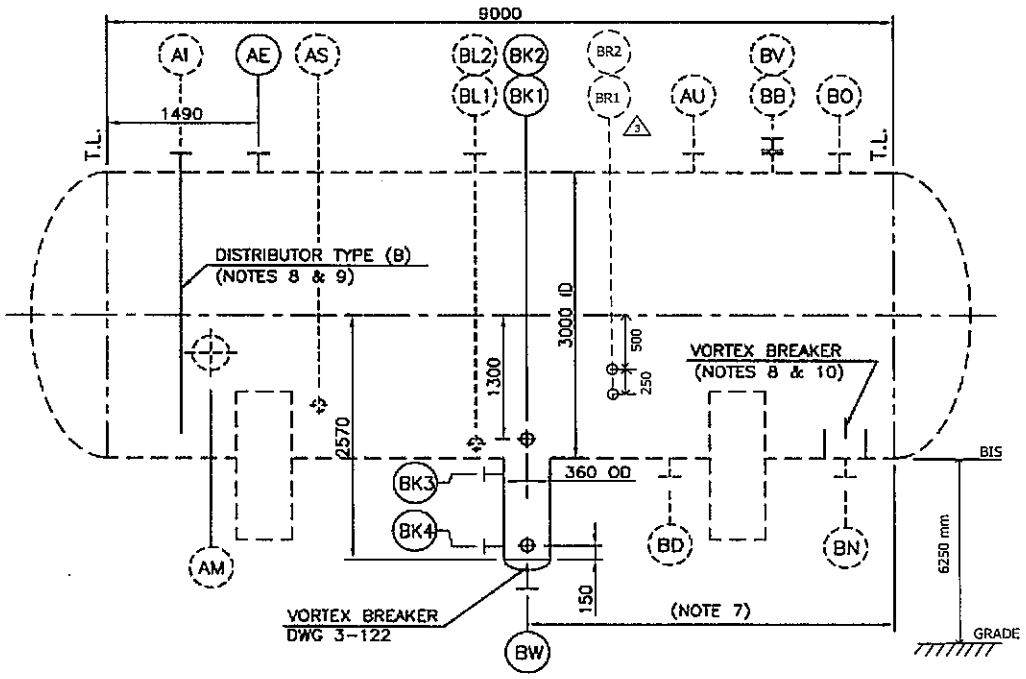

DESIGN CONDITIONS

Pressure:	4.5	bar(g)
At:	155	°C
Vacuum:	FV	bar(g)
At:	44	°C
Min. Design Metal Temp:	9 (Note 14)	°C
At:	MAWP	bar(g)
Maximum Liquid Level:	(Note 4&13)	mm
Specific Gravity of Liquid:	0.701	

OPERATING CONDITIONS

Pressure + :	1.1	bar(g)
At:	44	°C
Vacuum - :		bar(g)
At:		°C
Low Temperature:		°C
At:		bar(g)
Hydrogen Partial Pressure:		bar(a)
At:		°C

INSULATION

Type:	Hot
Req'd Thickness:	40 mm
Fireproofing:	Yes (75 mm)

CONSTRUCTION

MATERIALS		CORROSION ALLOWANCE		
Shell:	SA-516-70	3	mm	
Internals:	C.S.	n/a	mm	
Lining/Cladding:	n/a	n/a	mm	
Head	SA-516-70	3	mm	0
Boot	SA-516-70 (K.C.S)	6	mm	0

INTERNALS

DESCRIPTION	BULK DENSITY kg/m³	LIQUID HOLDUP Vol. %	ΔP bar		
Packing/Tray:	n/a	n/a	n/a		0
Catalyst:	n/a	n/a	n/a		
Mist Eliminator:	n/a	n/a	n/a		

NOTES & SPECIAL CONDITIONS

Stress Relieve (Process Reason Only):	NO
Vessel In Special Service:	
Steamout Required:	Yes

55189

ابن رشد ibn rushd FLUOR	HORIZONTAL VESSEL DATA SHEET	Contract: 10E0541A01 Equip. No.: 56-D-02 Revision : 3 Date : 14-Nov-2011 Unit : 56 - Sulfolane P.O. No. : Document No. : DS-56-DA-502 Sheet : 2 of 2	سابك sabic CTCI CORPORATION	REV

NOZZLE SCHEDULE

TAG	QTY	SIZE in	PRESSURE RATING	DESCRIPTION	REV
AI	1	24	150# RFWN	INLET W/ INTERNAL PIPE	
AM	1	26	150# RFWN	MANWAY W/ DAVIT (ASME B16.47 Series B)	
AS	1	2	150# RFWN	STEAMOUT (NOTE 12)	0
AU	1	12	300# RFWN	RELIEF	
BB	1	8	150# RFWN	VENTILATION W/ BLIND	
BL1	1	1-1/2	150# RFLWN	LEVEL	
BL2	1	1-1/2	150# RFLWN	LEVEL	
BN	1	14	150# RFWN	OUTLET W/ VORTEX BREAKER	
BO	1	16	150# RFWN	OUTLET	
BR1	1	1	150# RFLWN	LT	0
BR2	1	1	150# RFLWN	LT	0
BV	1	2	150# RFWN	VENT	
BD	1	2	150# RFWN	DRAIN	
AE	1	4	150# RFWN	EQUALIZING (NOTE 1)	
BK1	1	2	300# RFLWN	LEVEL (NOTE 1)	
BK2	1	2	300# RFLWN	LEVEL (NOTE 1)	
BW	1	2	150# RFWN	DRAIN W/ VORTEX BREAKER (NOTE 1)	
BK3	1	2	300# RFLWN	LEVEL	
BK4	1	2	300# RFLWN	LEVEL	

NOTES:

1) This vessel tag number 56-D-02 is the existing vessel 51-D-13 Cyclar Stripper Receiver modified for Reformate Splitter Receiver service. 0
Part of modifications are installation of new nozzles AE (Equalizing), BK1/BK2 (Level) & BW (Drain), and boot as well as replacement of existing pipe distributor and vortex breaker. Existing design condition: 11.1 bar(g) @ 120°C, new design condition: 4.5 bar(g) @ 155 °C. 0
2) CTCI to verify the available thickness after evaluating maintenance records and performing UT testing and confirm. 0
The CTCI to provide necessary ASME code documentation for the repair "R" stamp and new nameplate. 0
3) Dimensions are in millimeter unless otherwise noted.
4) Vessel shall have a Normal Liquid Level (NLL) hold-up to vessel centerline. HLL=1957 mm, LLL=1043 mm. 0
5) Vessel and boot heads are 2:1 Elliptical. 0
6) For nozzle elevation and orientation refer to vendor certified drawing no. DA-7034-02-001 Rev.2 dated 6/1/97.
7) Suitable location of boot to be verified based on vendor certified drawing no. DA-7034-02-001 Rev.2 dated 6/1/97.
8) Existing pipe distributor at inlet nozzle AI and existing vortex breaker at nozzle BN shall be replaced.
9) For details of pipe distributor at inlet nozzle AI see UOP Standard Drawing 3-183. 2
10) For details of vortex breaker at outlet nozzle BN see UOP Standard Drawing 3-123.
11) ASME code stamp is required.
12) Steamout at 150 (232 max.) °C and 3.5 (4.1 max.) bar (g) 0
13) Boot interface liquid level: HLL=1032 mm, LLL=748 mm. 0
14) The Min. Design Ambient Temperature should be 6°C. 0

THE ESTIMATED MECHANICAL WEIGHTS w/ THE ADDITION OF BOOT AND NOZZLES	(kg)
FABRICATED	24100
EMPTY	43860
OPERATING	68860
FULL OF WATER	101300
THICKNESS ARE BASED ON VENDOR CERTIFIED DRAWING No. DA-7034-02-001 REV.2 DATED 6/1/97	**(mm)**
SHELL	21
HEADS	23

2

55189

CTCI CORPORATION

CHIYODA CORPORATION

FOR RECORD

CLIENT : IBN RUSHD
PROJECT PTA & AROMATICS -
TITLE : AROMATICS
JOB NO. : 51046
DOC. NO.: DS-51-D-013 (1/1)

		REVISIONS			
MARK		1	2	3	4
APRD					
CHKD					
MADE					
DATE	Mar.08 '96	APR.03'96	May.24'96	Jan30'97	

UOP
25 East Algonquin Road • PO Box 5017 • Des Plaines, Illinois 60017-5017 • U.S.A.

VESSELS

PROJECT SPECIFICATION
560689 - 301 - 1 SHEET 15

REV	DATE	BY	APP'D	REV	DATE	BY	APP'D
0	5-26-95						
1	9-5-95	MAG	MAG				

SERVICE STRIPPER RECEIVER — ITEM NO ~~S-5413~~ 51-D-13

Design Conditions at Top	INT 11.1 BAR (g)	@120 °C	(=) BY CONTRACTOR
	EXT	@ °C	
	Metal Temperature (Min)	5 °C	
Operating Conditions		35 °C	
		°C	
Radiograph		HR	
Postweld Heat Treat		HR	
Joint Efficiency		HR %	

Materiel Specifications

Heads	SA516-70 (2)
Shell	SA516-70

	Thickness Required by Code-mm.	Corrosion Allowance mm. (Min)	
Shell		3	
Heads		3	

Vessel Heads

Vessel	2:1 ELLIPTICAL
Drop Leg	

Accessories Applied by Fabricator

Ladder & Platform Clips	AS REQUIRED (=)
Insulation Clips & Rings	YES
Vessel Support	YES

Nozzles and Manways

Mark	No	Size Inches	Service	
AI	1	24	INLET	
AH	1	26	MANWAY	(•)
AS	1	2	STEAMOUT	
AU	1	12	RELIEF	(2) (1)
BB	1	8	VENTILATION	
BL	2	1 1/2	LEVEL	
BN	1	14	OUTLET	
BO	1	16	OUTLET	
BR	2	1	LLS	
BV	1	2	VENT	
BD	1	2"	DRAIN (2)	

Class - ANSI CL150 (•) SHEET 2-NOTE A
(2) ANSI CL300

Facing - RAISED FACE

Normal Liquid Level = VESSEL CENTERLINE

Specific Gravity = .532

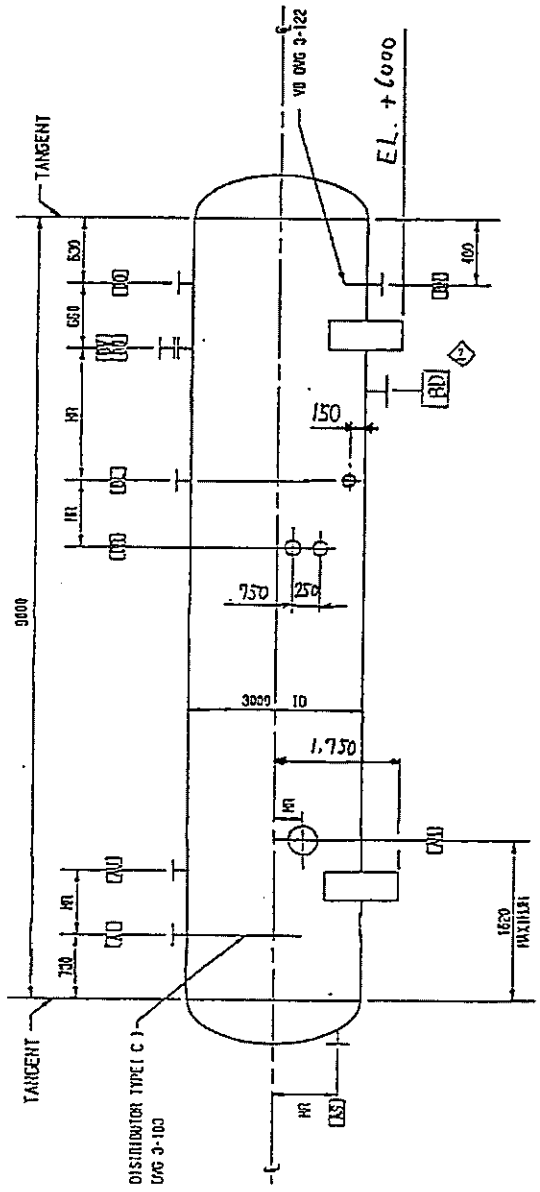

Drawings Referred to in this Specification

3-122-0	3-183-0	3-317-1			

509161

sabic

ARABIAN INDUSTRIAL FIBERS COMPANY

IR-II AROMATICS PROJECT

PROJECT NO. 10E0541A01

DOCUMENT TITLE:

CLAY TREATERS DATA SHEET

DOCUMENT NO:

DS-56-DA-503

REV	DESCRIPTION	BY	CHK.	APPR.	DATE
3	Revised as Marked	LSH	SYL	YSL	14-Nov-11
2	Revised as Marked	LSH	SYL	YSL	11-Aug-11
1	Issued for Design	LSH	SYL	YSL	26-Apr-11
0	Issue For Approval	LSH	SYL	YSL	9-Mar-11

ابن رشد ibn rushd

ARABIAN INDUSTRIAL FIBERS COMPANY YANBU, KINGDOM OF SAUDI ARABIA

CTCI CORPORATION

CERTIFIED

PROJ. MGR DATE

CLIENT DATE

PAGE 1 OF 2

XC32B-56-503

GN-502 84.10

CONTENTS

Attachment total 2 pages.

ابن رشد
ibn rushd

VERTICAL VESSEL DATASHEET

Contract:	10E0541A01
Equip. No.:	56-D-03A/B
Revision:	3 Date: 14-Nov-2011
Unit:	56 - Sulfolane
PO No.:	
Document No.	DS-56-DA-503
Sheet:	1 of 2

سابك
sabic
CTCI CORPORATION

REV

CLIENT: Arabian Industrial Fibers Company (Ibn Rushd)
PLANT: Sulfolane
SERVICE: Clay Treaters
SITE: Yanbu, Kingdom of Saudi Arabia

DESIGN SKETCH

VESSEL DIMENSIONS: ID: 5900 mm T/T: 9900 mm

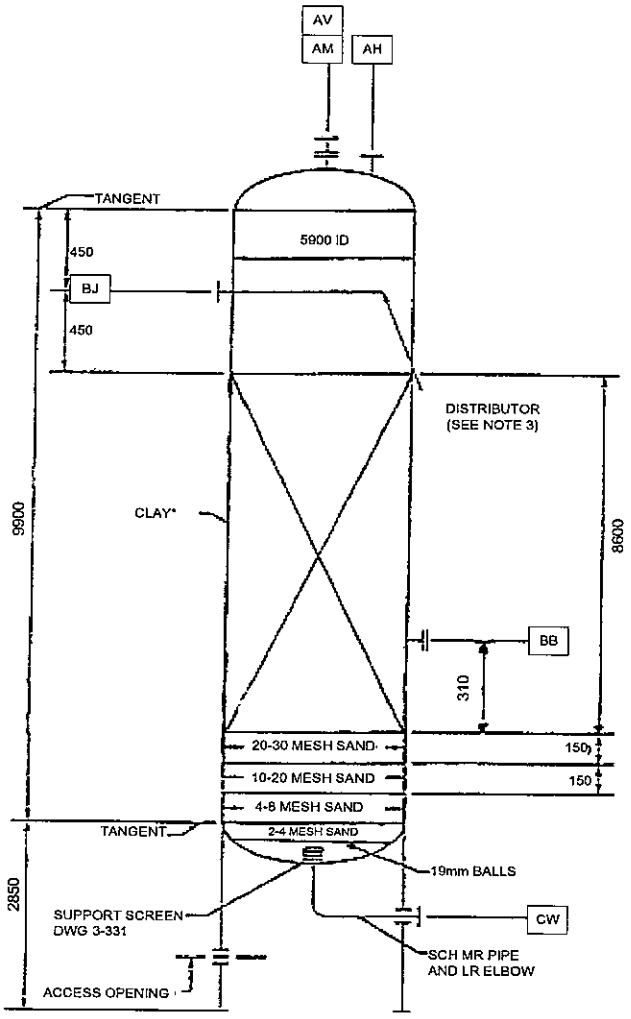

*BED MATERIAL, CERAMIC/ALUMINA BALLS AND SAND TO BE PROVIDED BY OTHERS.

DESIGN CONDITIONS

Pressure:	20.6	bar(g)	at	230	°C
Vacuum:	FV	bar(g)	at	200	°C
Min Metal Temp:	9 (Note 8)	°C	at		bar(g)
Maximum Liquid Level:	NOTE 4				mm
Specific Gravity of Liquid:	0.688		at		°C

OPERATING CONDITIONS

Pressure:	15.5	bar(g)	at	160	°C
Vacuum:		bar(g)	at		°C
Low Temperature:		°C	at		°C
Hydrogen Partial Press.		bar(g)	at		°C

INTERNALS & INSULATION

DESCRIPTION	Bulk Density kg/m³	Liquid Holdup vol%	Pressure Drop bar
Packing:			
Catalyst:			
Mist Eliminator:			
Insulation	50 mm Hot ■	Cold ☐	
Fire Proofing	75 mm Yes ■	No ☐	

CONSTRUCTION

	Materials	Corrosion Allowance
Shell:	SA-516-70	3 mm
Heads:	SA-516-70	3 mm
Lining/Cladding:		mm
Internals:		mm

SPECIAL CONDITIONS

Stress Relieve (Process Reason Only):	Yes ☐	No ☐
Vessel in Wet Sour Service:	Yes ☐	No ■
Steamout Required:	Yes ☐	No ■

See Notes on Page 2

THE ESTIMATED MECHANICAL WEIGHTS	(kg)	2
FABRICATED		
EMPTY		
OPERATING	589,500	
FULL OF WATER		

THE ESTIMATED WALL THICKNESS	(mm)	2
TOP HEAD		
SHELL		
BTM HEAD		
SKIRT		

55189

ابن رشد
ibn rushd

VERTICAL VESSEL DATASHEET

Contract:	10E0541A01		
Equip. No.:	56-D-03A/B		
Revision:	3	Date:	14-Nov-2011
Unit:	56 - Sulfolane		
PO No.:			
Document No.:	DS-56-DA-503		
Sheet:	2 of 2		

سابك
sabic
CTCI CORPORATION

REV

NOZZLE SCHEDULE

Tag	Qty.	Size in	Pressure Rating	Description
AH	1	8	300#RFLWN	RELIEF
AM	1	20	300#RFLWN	MANWAY
AV	1	3	300#RFWN	VENT
BB	1	24	300#RFLWN	MANWAY
BJ	1	8	300#RFLWN	INLET
CW	1	8	300#RFWN	OUTLET

NOTES:

1. Formerly Cyclar Clay Treaters, 51-D-14A, B, no changes.
   Clay catalyst-It is intended that the initial inventory of catalyst/chemical be filled/replaced prior to startup.
2. Clay treaters (two required).
   8" distributor per UOP STD DWG 3-314.
3. Provide 2 (total) slots 8 mm wide at 45 DEG on either side of vertical centerline (pointing up).
4. Normal liquid level (NLL) is liquid full.
5. Ladder & Platform Clips : As required.
6. Insulation Clips & Rings : Yes.
7. Vessel Support : Yes.
   Vessel heads are 2:1 Elliptical.
8. The Min. Design Ambient Temperature should be 6℃.
9. The clay catalyst quantity is 235m^3/ Treater.

3

CTCI CORPORATION

CHIYODA CORPORATION

FOR RECORD

CLIENT : IBN RUSHD
PROJECT : PTA & AROMATICS -
TITLE : AROMATICS
JOB NO. : 51046
DOC. NO. : DS-51-D-014 (1/1)

		REVISIONS			
MARK		1	2	3	4
APRD					
CHKD					
MADE	K. Nakajima	K. Nakajima	K. Nakajima		
DATE	Mar. 05 '96	APR.15 '96	Jan.30 '97		

uop

25 East Algonquin Road • PO Box 5017 • Des Plaines, Illinois 60017-5017 • U.S.A.

VESSELS

PROJECT SPECIFICATION
560689 - 301 - 1 SHEET 16

REV	DATE	BY	APP'D	REV	DATE	BY	APP'D
0	5-26-95						
1	9-5-95	MAG	MAG				

SERVICE: CLAY TREATERS (TWO REQUIRED)

ITEM NO: ~~D-5~~ 51-D-14 A&B

Design Conditions at Top	INT 29.6 BAR (g)	@230 °C
	EXT FULL VACUUM	@200 °C
	Metal Temperature (Min)	9 °C
Operating Conditions		200 °C
		°C
Radiograph		NR
Postweld Heat Treat		NR
Joint Efficiency		NR %

(=) BY CONTRACTOR

Material Specifications

Heads	SA516-70
Shell	SA516-70

Shell	Thickness Required by Code-mm.	Corrosion Allowance mm. (Min)
		3
Heads		
		3

Vessel Heads

Top Head	2:1 ELLIPTICAL
Bottom Head	2:1 ELLIPTICAL

Accessories Applied by Fabricator

Ladder & Platform Clips	AS REQUIRED (=)
Insulation Clips & Rings	YES
Vessel Support	YES

Nozzles and Manways

Mark	No	Size Inches	Service
AH	1	8	RELIEF
AM	1	20	MANWAY
AV	1	3	VENT
BB	1	24	MANWAY
BJ	1	8	INLET
CV	1	8	OUTLET

Class - ANSI CL300

Facing - RAISED FACE

Normal Liquid Level = LIQUID FULL

Specific Gravity = .688

SCHEMATIC ELEVATIONS OF BED SUPPORT MATERIALS. MAY NOT BE REPRESENTATIVE OF ACTUAL DIMENSIONS.

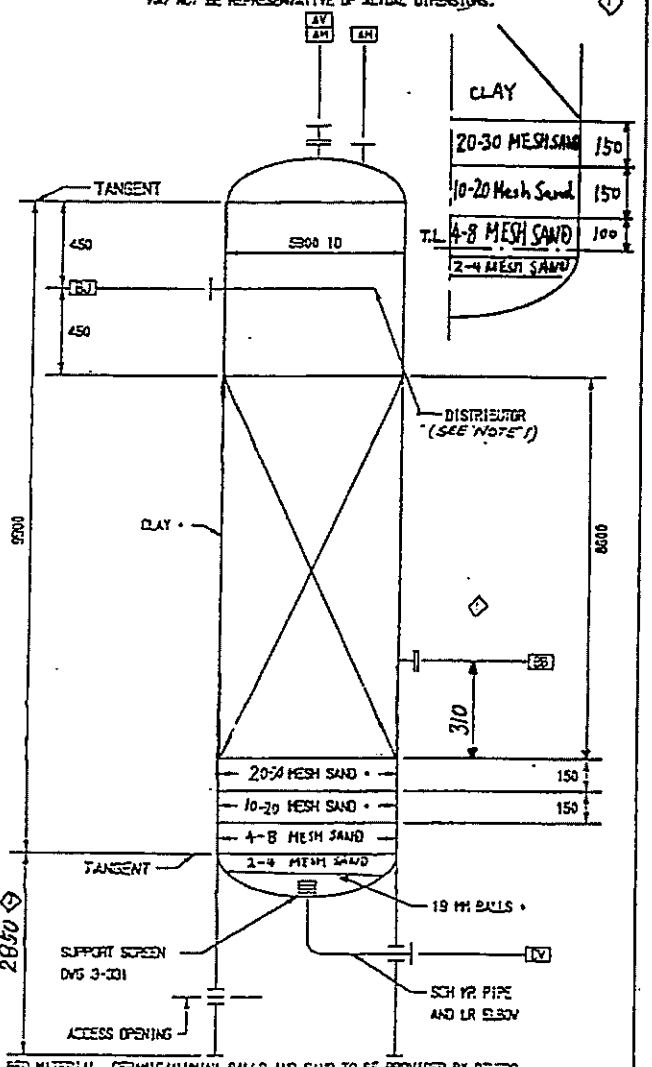

* BED MATERIAL, CERAMIC/ALUMINA BALLS AND SAND TO BE PROVIDED BY OTHERS.

NOTES: 1) 8" DISTRIBUTOR PER UOP STD DWG 3-314. PROVIDE 2 (TOTAL) SLOTS 8 MM WIDE AT 45 DEG ON EITHER SIDE OF VERTICAL CENTERLINE (POINTING UP).

Drawings Referred to in this Specification

3-314-2	3-331-3					

4

509162

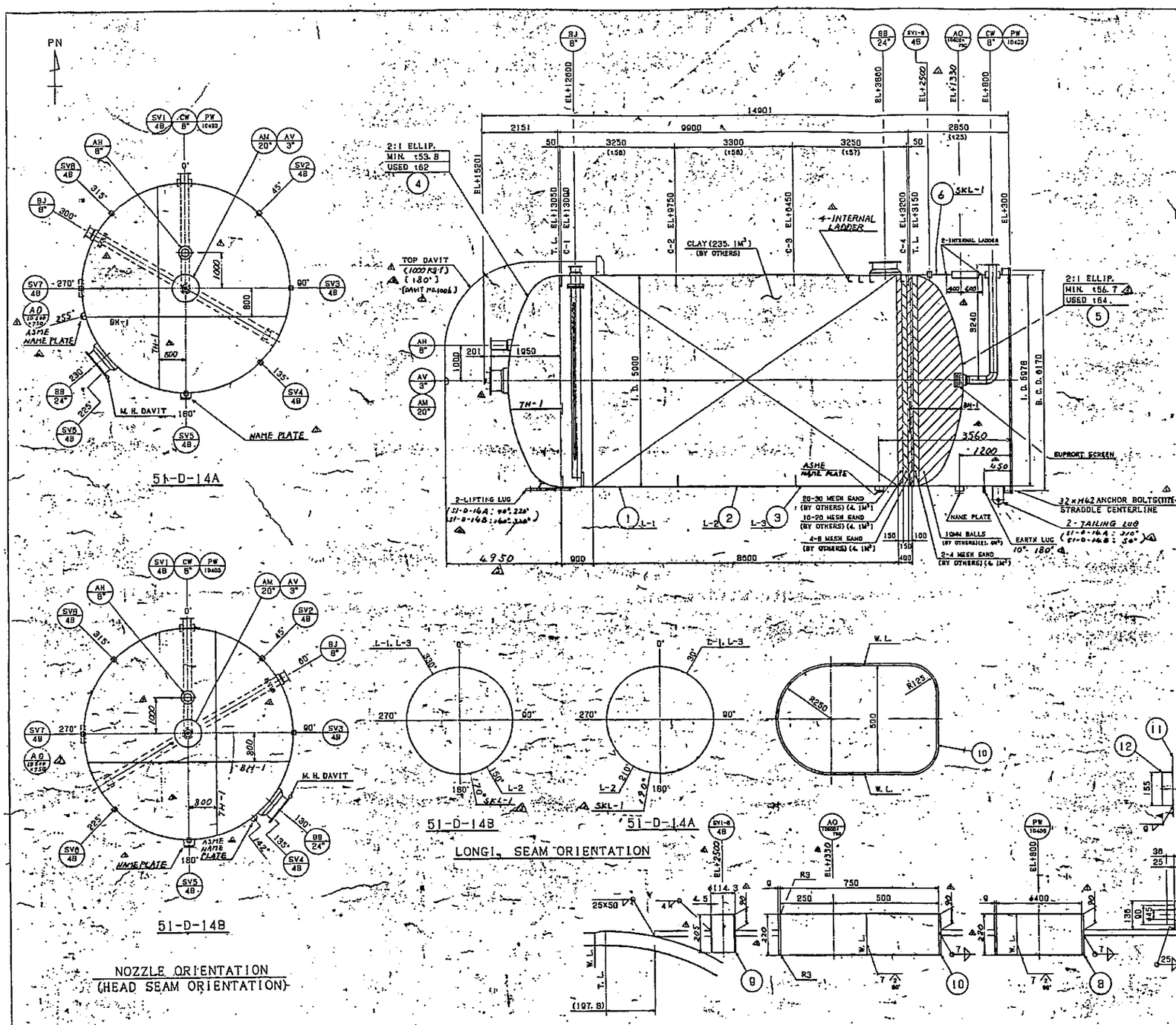

3RD. ANGLE PROJ.

CTCI CORPORATION

REFERENCE

REV. NO.	DATE	BY	DESCRIPTION	D.S.M. APP'D	Q.A.E. REV'ED
A	AUG.21.'96	T.Y	PURCHASER'S REQUEST FOR CONSTRUCTION		
B	SEP.12.'96	T.Y	REVISED MIN. THK OF BTM HEAD		
C	OCT.11.'96	T.Y	REVISED OF USED PLATE REVISED OF HEAD SEAM ORIENTATION		
D	NOV.13.'96	T.Y	ADDED NAME PLATE FITTING POSITION & ETC.		
E	DEC.18.'96	T.Y	ADDED TOP DAVIT HEIGHT & NO.		
F	FEB.5.'97	H.Y	AS BUILT		

関連図面 REFERENCE DWG.

TITLE タイトル	DWG. NO. 図面番号
DETAIL OF NOZZLE ノズル詳細	B81481-123-01
MANHOLE DAVIT マンホールダビット	B81481-123-02
INTERNAL 内部品	B81481-124-01
OUTLET BASKET アウトレットバスケット	B81481-124-02
EXTERNAL FITTING 外部付属品	B81481-125-01
EXTERNAL FITTING (51-D-14A PLATFORM CLIP)	B81481-125-02
TOP DAVIT トップダビット	B81481-125-03
LIFTING LUG リフティングラグ	B81481-125-04
EXTERNAL FITTING (51-D-14B PLATFORM CLIP)	B81481-125-05
NAME PLATE 銘板	B81481-001-80
NAME PLATE (ASME CODE) 銘板 (ASME CODE)	B81481-001-85

設計条件 DESIGN DATA

図面番号 No. REQUIRED		2
法規・基準 REGULATION & CODE		ASME SECT VIII DIV. 1-1995 (1995 EDITION)
ASME CODE STAMP		YES
FLUID NAME		[illegible]
SPECIFIC GRAVITY		0.688
NORMAL LIQUID LEVEL		LIQUID FULL
(M.A.W.P.=) DESIGN PRESS.	bar-G	20.6 (298.8PSIG)/F.V. V.
設計温度 DESIGN TEMP.	°C	INT. 230 (446°F) /EXT. 200 (392°F)
MIN. DESIGN METAL TEMPERATURE	°C	2 (35.6°F)
運転圧力 OPER. PRESS.	bar-G	–
運転温度 OPER. TEMP.	°C	200 (392°F)
水圧試験圧力 HYDRO'C TEST PRESS.	bar-G	△ 31.6 (458 PSIG)
水圧試験温度 HYDRO'C TEST TEMP.	°C	△ MIN. 5 (41°F)
真空試験圧力 VACUM TEST PRESS.	bar-G	–
溶接後熱処理 POST WELD HEAT TREATMENT		YES
放射線検査 RADIOGRAPH		FULL
腐れ代 CORR. ALLOWANCE	mm	3.0 EXTRA 1.6
継手効率 JOINT EFFICIENCY		1.0
耐火被覆 FIRE PROOF	mm	75 (BOTH SIDE)
保温 INSULATION	mm	50 (HOT)
容積 VOLUME	m³	324.4 (11455.1FT³).
胴体重量 SECTION WEIGHT	Kg	144900
TEST WEIGHT	Kg	△ 659000
運転重量 OPERATING WEIGHT	Kg	589500
CHARPY IMPACT TEST		NO (UCS-66(a))
塗装 PAINTING		△ SYSTEM 32-5 PER CHIYODA SPEC. SP-50-X-001
NORMALIZING HEAT TREATMENT		HEADS (AFTER HOT FORMING)

MARKS	NAME	呼径 NOM. SIZE	個数 No. REQ'D	圧力 PRESS.	厚さ THICK-NESS	フランジ規格 F. RATING	フランジ突出 PROJECTION (TO SHELL CL)	備考 REMARKS
AO	ACCESS OPENING	19400	1	t9	–	–	–	
SV1-6	SKIRT VENT	4B	8	t4.5	–	–	–	
PW	PIPE WAY	19400	1	t9	–	–	–	
CW	OUTLET	8"	1	t12.7	ANSI 300 RFWN	SEE DWG		
BJ	INLET	8"	1	△ t28.85	ANSI 300 RFLWN	3210		
BB	MANWAY	24"	1	t46	ANSI 300 RFWN	3310		BLIND FLG DAVIT △
AV	VENT	3"	1	t11.1	ANSI 300 RFWN	SEE DWG		△
AM	MANWAY	20"	1	t30.6	ANSI 300 RFLWN	SEE DWG		REDUCE FLG OVER MANRIDS
AH	RELIEF	8"	1	t28.6	ANSI 300 RFLWN	SEE DWG		

	TYPE 1	TYPE 2	TYPE 3	TYPE 4	TYPE 5
	C-1	C-3, 4	C-2 L-1, 2, 3	SKL-1	TH-1 BH-1
INSIDE	SAW	SAW	SAW	SAW	SMAW
OUTSIDE	SAW	SAW	SAW	SAW	SMAW

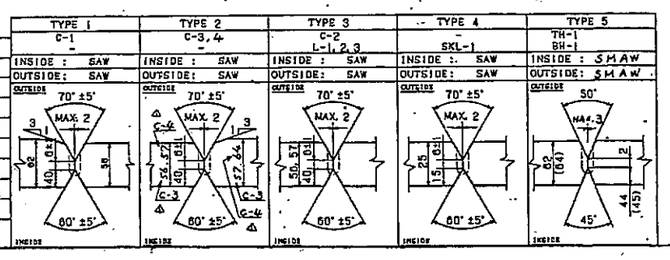

CHIYODA CORPORATION
JOB NO. S1046 IBN RUSHD AROMATICS PROJECT
PO NO. SAYPOA0021
REQ NO. MR-50-D-007
IDENT NO. 51-D-14A/B-DW0001
A-NO COMMENTS PROCEED WITH FABRICATION
B-PROCEED WITH FABRICATION COMMENTS TO BE INCORPORATED IN NEXT REVISION
C-DO NOT PROCEED WITH FABRICATION
DATE
PURCHASER'S PERMISSION TO PROCEED OR REVIEW TAKEN ON VENDOR PRINTS SHALL NOT RELIEVE VENDOR FROM ITS RESPONSIBILITIES OR LIABILITIES UNDER PURCHASE ORDER

ASME STAMP YES

DIV. 1 1995 BY ASME SECT VIII 1995 EDITION

REVIEWED BY Q.A. ENGINEER
DATE JUN. 13 '96

TOTAL								134819 Kg	
64	GUSSET PLATE	13	SS400		2.9	186	t16		○
32	PLATE WASHER	12	SS400		2.8	128	t36		○
1	COMP. RING	11	SS400			517	t25		○
1	ACCESS OPENING	10	SS400			△ 40	10500×750×t9		○
8	SKIRT VENT	9	SCP		21	17	48×t4.5		○
1	PIPE WAY	8	SS400			△ 20	10400×t9		○
1	BASE PLATE	7	SA-36			1492	t40		○
1	SKIRT	6	SA-516-70			9078	t25		○
1	HEAD	5	SA-516-70			21468	t64		○
1	HEAD	4	SA-516-70			20783	t62		○
1	SHELL	3	SA-516-70			27215	t57		○
1	SHELL	2	SA-516-70			27144	t56		○
1	SHELL	1	SA-516-70			26753	t56		○
NO. REQUIRED	PARTICULARS	MARKS	MATERIAL	TEST MARK	1-UNIT	TOTAL (ALL UNITS)	REMARKS		

SASEBO HEAVY INDUSTRIES Co., LTD. MACHINERY DESIGN DEPT.

APPROVED BY: JUNE.13.'96
CHECKED BY: JUNE.13.1996 T. Ogahara
CERTIFICATED BY: JUN.13.1996
DRAWN BY: T. Tamada
DATE ISSUED: JUN.13.1996
CLASS
SCALE 1/60 1/10

CHIYODA CORPORATION
IBN RUSHD PTA& AROMATICS PROJECT-AROMATICS
CLAY TREATERS 51-D-14 A&B 004196
GENERAL ASSEMBLY DRAWING

NO. REQUIRED: SHOP 1 SET; FIELD 2 SETS

DWG. NO. B81481-121-01 REV. F

SASEBO HEAVY INDUSTRIES CO., LTD

DD. 3. 1/3

سابك
sabic

ARABIAN INDUSTRIAL FIBERS COMPANY

IR-II AROMATICS PROJECT

PROJECT NO. 10E0541A01

DOCUMENT TITLE:

TATORAY REACTOR DATA SHEET

DOCUMENT NO:

DS-57-DA-503

REV	DESCRIPTION	BY	CHK.	APPR.	DATE
2	Revised As Marked	KCK	CBC	YSL	11-Aug-11
1	Issued For Design	KCK	CBC	YSL	26-Apr-11
0	Issue For Approval	KCK	CBC	YSL	9-Mar-11

ابن رشد ibn rushd

ARABIAN INDUSTRIAL FIBERS COMPANY YANBU, KINGDOM OF SAUDI ARABIA

CTCI CORPORATION

CERTIFIED

PROJ.

MGR _____ DATE _____

CLIENT _____ DATE _____

PAGE 1 OF 2

XC32B-57-503

GN-502 84.10

55280

CONTENTS

ITEM	EQUIPMENT NO.	SHEET NO.	REV. NO.	REV. DATE
1.	57-D-03	1 THRU 3 OF 3	2	11-Aug.-2011

Attachment total 15 page.

ابن رشد
ibn rushd

VERTICAL VESSEL DATA SHEET

Contract:	10E0541A01
Equip. No.:	57-D-03
Revision:	2 Date: 11-Aug.-2011
Unit:	57 - Tatoray
PO No.:	
Document No.:	DS-57-DA-503
Sheet:	1 of 3

سابك
sabic
CTCI CORPORATION

REV

Client:	Arabian Industrial Fibers Company
Service:	Tatoray Reactor
Plant:	Tatoray
Site:	Yanbu, Kingdom of Saudi Arabia

DESIGN SKETCH

VESSEL DIMENSIONS: ID: 4000 mm T/T: 5500 mm

See Page 3 for Design Sketch

DESIGN CONDITIONS

Pressure:	34	bar(g)	at	518 ℃
Vacuum:	FV	bar(g)	at	482 ℃
Min. Metal Temp:	9 (Note 14)	℃	at	MAWP bar(g)
Liquid Level:	Full (Note 3)			mm
Specific Gravity of Liquid:			at	℃

OPERATING CONDITIONS

Pressure:	29.1(Note 4)	bar(g)	at	Max. 495 ℃
Vacuum:		bar(g)	at	℃
Low Temperature:		℃	at	℃
Hydrogen Partial Press.		bar(a)	at	℃

INTERNALS & INSULATION

DESCRIPTION	Bulk Density kg/m³	Liquid Holdup vol%	Pressure Drop bar
Packing:			
Catalyst:	715 (Note 6)		
Mist Eliminator:			
Insulation	125 mm Hot ■	Cold ☐	
Fire Proofing	75 mm Yes ■	No ☐	

CONSTRUCTION

	Materials	Corrosion Allowance
Shell:	A307 GR. H or GR. 12	3 mm
Heads	A307 GR. H or GR. 12	3 mm
Support		mm

SPECIAL CONDITIONS

Stress Relieve (Process Reason Only):	Yes ☐	No ■
Vessel in Wet Sour Service:	Yes ☐	No ■
Steamout Required:	Yes ☐	No ■

WEIGHTS ARE BASED ON THE VENDOR CERTIFIED DRAWING No.
57D03DW0001 Rev. 4 3/24/97 2

EMPTY	115000
OPERATING	222200
FULL OF WATER	218100

THICKNESS ARE BASED ON THE VENDOR CERTIFIED DRAWING No.

	(mm)
TOP HEAD	(Note 5)
SHELL	(Note 5)
BTM HEAD	(Note 5)
SKIRT	

55280

ابن رشد
ibn rushd

VERTICAL VESSEL DATASHEET

Contract:	10E0541A01
Equip. No.:	57-D-03
Revision:	2 Date: 11-Aug.-2011
Unit:	57 - Tatoray
PO No.:	
Document No.	DS-57-DA-503
Sheet:	2 of 3

سابك
sabic
CTCI CORPORATION

REV

NOZZLE SCHEDULE

Tag	Qty.	Size in	Pressure Rating	Description
A	1	18	600# WNRF	Inlet
B	1	30 I.D.	Special	Manway
C	1	18	600# WNRF	Outlet
D	2	6	600# WNRF	Catalyst Withdrawal

NOTES:

1) Existing. For reactor modifications see UOP Dwg. 951609-304-01-A1 Rev. 0. Reactor Sectional Elevation Item No. 57-D-03.
2) All dimensions are in millimeter unless otherwise noted.
3) For volume of ceramic/alumina balls (to be supplied by others), see UOP Project Specification 560695-312.
4) Operating Pressure: 29.7/29.1 bar(g) (Top/Bottom), Operating Temperature: 482/495 °C (Top/Bottom). 2
5) Manufacturer/Contractor is responsible to comply with all applicable codes and standards including any additional requirements specified in the Uop Specification.
6) Design ceramic/alumina balls density: 2160 kg/m3
7) All internals to be fabricated to pass thru a 30" manway.
8) For existing UOP drawing see Project Specification:
   560695-304-1 Sheet 5
   560695-304-1 Sheet 6
   560695-304-0 Sheet 7
   560695-304-1 Sheet 8
   560695-304-1 Sheet 9
9) ASME VIII div. 1 Ed. '95 code stamp is required.
10) Following UOP Standard Specification: 3-12-2.
11) Following UOP Project Specification: 560688-102.
12) All inlet ceramic balls shall be type I and comply with the requirement of UOP Standard Specification 3-37.
13) Material used shall be in accordance with the following specifications:
   Plate - SA387 Gr. 11 or 12
   Forgings - SA182 Gr. F 11 or F12
   SA336 Gr. F 11 or F12
   Pipe - SA335 Gr. P11 or P12
14) The Min. Design Ambient Temperature should be 6 °C.

55280

ابن رشد ibn rushd	VERTICAL VESSEL DATASHEET	Contract: 10E0541A01	سابك sabic
		Equip. No.: 57-D-03	
		Revision: 2 Date: 11-Aug.-2011	
		Unit: 57 - Tatoray	
		PO No.:	
		Document No.: DS-57-DA-503	CTCI CORPORATION
		Sheet: 3 of 3	REV

DESIGN SKETCH

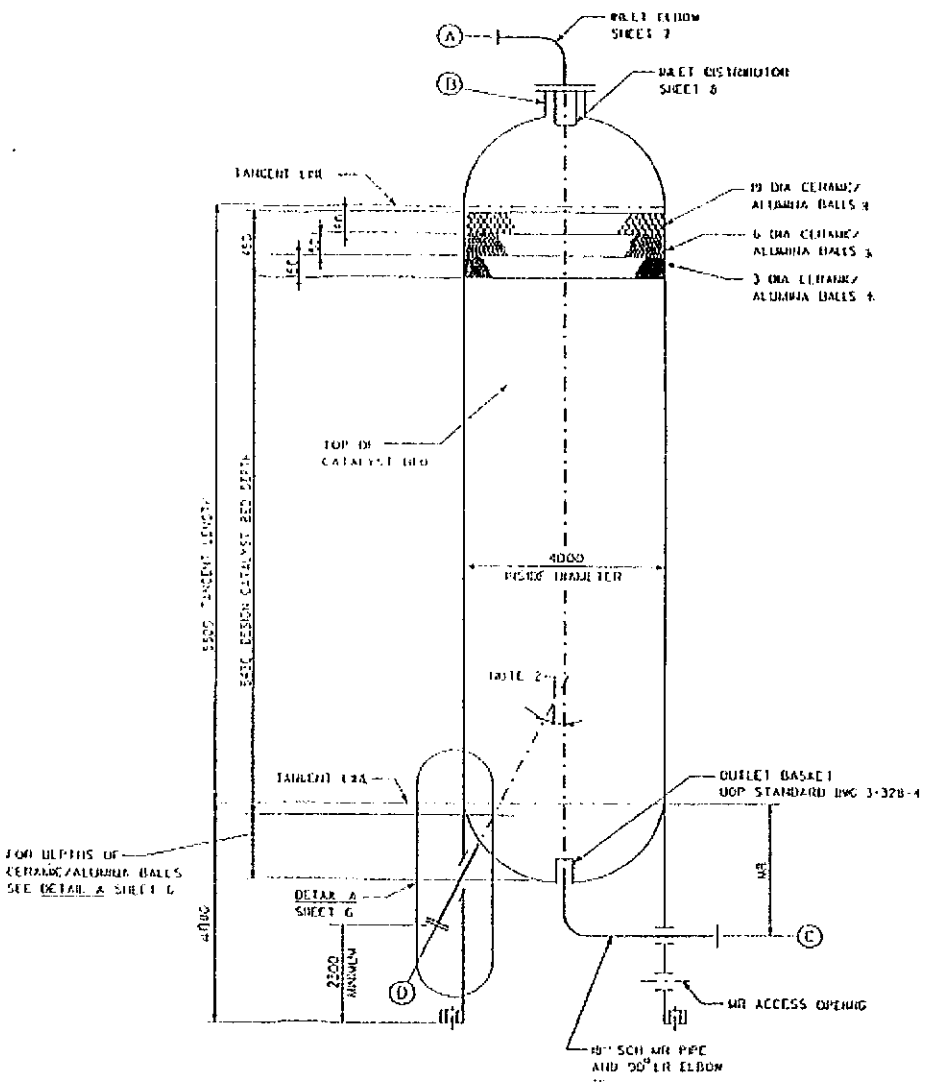

CTCI CORPORATION

CHIYODA CORPORATION

FOR RECORD

			REVISIONS			
CLIENT : IBN RUSHD	MARK		1	2	3	4
PROJECT PTA & AROMATICS -	APRD	T. Ito	T. Ito	T. Ito		
TITLE : AROMATICS	CHKD					
JOB NO. : 51046	MADE	K. Nakamura	K. Nakamura	K. Nakamura		
DOC. NO. : DS-57-D-003 (1/9)	DATE	APR.01 '96	June.11 '96	Feb 09 '97		

uop

25 East Algonquin Road • Des Plaines, Illinois 60017-5017 • USA.

REACTORS

(Item No. 57-D-03)

PROJECT SPECIFICATION

560695 – 304 – O Sheet 1

REV	DATE	BY	APP'D	REV	DATE	BY	APP'D
O	4/1/96	SPP	TPD				

DESCRIPTION	SHEET
NOTES	2-4
REACTOR SKETCH	5
REACTOR DETAILS	6
INLET ELBOW	7
INLET DISTRIBUTOR	8
SKIRT DETAIL	9

26

(714)

509091

55280

CTCI CORPORATION

DS-57-D-003 (2/9)

UOP
25 East Algonquin Road • Des Plaines, Illinois 60017-5017 • USA

REACTORS

PROJECT SPECIFICATION
560695 -304- O Sheet 2

REV	DATE	BY	APP'D	REV	DATE	BY	APP'D
O	4/19/9	BPP					

GENERAL NOTES

A. The Tatoray Reactor (~~D-5703~~ 57-D-03) shall be constructed in accordance with the following:

Code(s):	ASME Boiler and Pressure Vessel Code, Section VIII, Division 1, Pressure Vessels (Latest Edition and Addenda).
Specifications:	UOP Standard Specification 3-12-2 UOP Project Specification 560688-102

B. Where "MR" is specified, it indicates that it is the manufacturer's and/or contractor's responsibility to comply with all applicable codes and standards including any additional requirements specified in the UOP Specifications.

C. Skirt to shell attachment shall be constructed as shown on the reactor elevation in this specification. Attachment designs must accommodate full, external, on site Ultrasonic Angle Beam examination of the shell/head weld(s).

D. All nozzle projections shall be MR unless noted otherwise.

E. Reinforcement for nozzles and manways shall be integrally provided in nozzle neck. All nozzle and manway attachments shall be in accordance with figure UW-16.1, sketch f of section VIII, Division 1 of the ASME Code. Sketches f-1 and f-4 are recommended configurations.

F. Flanges that are not within the scope of ASME/ANSI B16.5 shall comply with section VIII, Div. 1 of ASME code.

G. All flanges intended for use with spiral-would gaskets shall have a flange surface finish of 125 Ra minimum to 250 Ra maximum.

H. Material used shall be in accordance with the following specifications:

1. Plate	-	SA387 Gr. 11 or 12
2 Forgings	-	SA182 Gr. F11 or F12
	-	SA336 Gr. F11 or F12
3. Pipe	-	SA335 Gr. P11 or P12

I. Gaskets for use with raised face flanges shall be spiral wound with non-asbestos filler. These gaskets shall be designed per API 601 and shall be suitable for service.

CTCI CORPORATION

DS-57-D-003 (3/9)

uop
25 East Algonquin Road • Des Plaines, Illinois 60017-5017 • USA.

REACTORS

PROJECT SPECIFICATION
560695 -304- 0 Sheet 3

REV	DATE	BY	APP'D	REV	DATE	BY	APP'D
0	4/14/95	BPP					

FABRICATION

A. Main reactor welds shall be full penetration double butt (or equivalent) welds free of undercuts and ground for radiographic inspection. They shall be designed to permit 100% radiographic inspection.

B. Welds attaching non-pressure-retaining components to pressure-retaining components shall be full penetration. All fillet welds attached to pressure-retaining components shall be ground to a smooth, concave contour.

C. All pressure retaining welds of the vessel, including any weld between an integral skirt to pressure vessel forging and the bottom head or shell of the pressure vessel, shall be located and fabricated to allow full, external, on-site Ultrasonic examination. For heavy wall pressure vessels (defined as a shell thickness in excess of 2 inches), or any pressure vessel utilizing an internal lining (clad or weld overlay) a calibration block for Ultrasonic examination shall be provided. The calibration block shall be in accordance with ASME Section V, Paragraph T-542.2.

D. All components (regardless of size, thickness, or product form) shall be Postweld Heat Treated in accordance with ASME Section VIII, Division 1, except that the hold temperature shall be 1275°F ± 25°F (691°C± 14°C).

E. The maximum room temperature tensile strength of all pressure-retaining components, materials, and welds shall be 100,000 psi (690 MPa).

E. The product analysis content of Tin and Phosphorus for all pressure-retaining components shall meet the following weight percent limits (welding consumables included):

$Sn \leq 0.015\%$
$P \leq 0.012\%$

EXAMINATION/TESTING

A. Ultrasonic:
All weld reinforcements shall be contoured to allow proper interpretation of Ultrasonic examination.

79

55280

CTCI CORPORATION

DS-57-D-003 (4/9)

UOP
25 East Algonquin Road • PO Box 5017 • Des Plaines, Illinois 60017-5017 • USA

PROJECT SPECIFICATION
560695 -304- | SHEET 4

REACTORS

REV	DATE	BY	APP'D	REV	DATE	BY	APP'D
0	4/19/85	BPP					
1	5/17/10:1	TLW	TPD				

B. Impact Text:
Charpy V-notch impact testing is required for all pressure-retaining components and welds. Impact tests shall be conducted in accordance with ASME Section VIII, Division 1, Paragraph UG-84, except that there shall be no exemptions from impact testing, and the test temperature shall not exceed 0°F (-18°C). When the tested component or weld will receive heat treatment, the test specimens shall be supplied in a completely heat-treated condition.

C. Magnetic Particle Examination:

1. Examination shall be in accordance with Appendix VI of Section VIII, Division 1, of the ASME code. If prods are used, tips shall be carbon steel, not lead or coppper. (1)

2. All plate edges shall be examined after trimming, but prior to welding, to reveal laminations and injurious segregations. Laminations and injurious segregations shall be removed by chipping or grinding and shall be re-examined to assure that all defects have been removed.

3. Double-butt welds shall have the initial root passes, including root tack welds, chipped, ground and gouged to sound metal, and the back chipped welds, welding groove and plate edges examined to assure that all cracks, pin holes, porosity or other weld defects are removed before commencing welding on the second side.

4. All weld root areas shall be examined before and after removal of defects.

D. Chemical Analysis:

1. Certified chemical analysis of all automatic weld wire is requiired. A check analysis of every 15th reel of wire or heat for alloy content is required.

2 Sample of each complete shell, head and nozzle weld shall be analyzed to confirm required alloy content. Samples to be taken from the inside weld surface prior to weld overlay.

79

509094

37-4

55280

55280

CTCI CORPORATION

DS-57-D-003 (5/9)

UOP

25 East Algonquin Road - PO Box 5017 - Des Plaines, Illinois 60017-5017 - USA

REACTORS

PROJECT SPECIFICATION							
560695 - 304 - 1						SHEET 5	
REV	DATE	BY	APVD	REV	DATE	BY	APVD
0	4/19/95	DPP					
1	5/11/95	TLW	TPD				

NAME TATORAY REACTOR ITEM ~~D-3703~~ 57-D-03

Design Conditions	INT 34 Bars (g) @ 518°C	
	EXT FULL VACUUM @ 484°C	
	Min Metal Temperature	9°C
Operating Conditions		400°C
Radiograph	FULL	
Postweld Heat Treat	YES	
Joint Efficiency	100%	

Material Specifications

Shell	A387 GR. 11 OR GR. 12		
Heads	SAME AS SHELL		
Lining			
	Thickness Reqd By Code-mm	Corrosion Allowance mm (MIN)	
Shell	MR	3	
Heads	MR	3	
Reactor Heads	Hemispherical		

Accessories Applied by Fabricator

Ladder And Platform Clips	YES
Insulation Clips And Rings	YES
Vessel Support	YES

Nozzles and Manways

Mark	No	Size Inches	Service
A	1	10	INLET
B	1	30 I.D.	MANWAY
C	1	10	OUTLET
D	2	6	CATALYST WITHDRAWAL

Rating- ANSI CL.600**

Facing-Raised Facing

**EXCEPT NOZZLE (B) WHICH SHALL BE SPECIALLY DESIGNED PER ASME SECTION VIII, DIV. I.

NOTES:

1. ALL INTERNALS TO BE FABRICATED TO PASS THRU A 30" ID MANWAY.
2. CONTRACTOR TO ORIENT UNLOADING NOZZLE FOR MAXIMUM CATALYST REMOVAL. PROVIDE PROPER WORKING CLEARANCES BETWEEN FLANGES "C", "D", REACTOR SUPPORT, OUTLET ELBOW AND AIR SPACE.
3. FOR VOLUME OF CERAMIC/ALUMINA BALLS (TO BE SUPPLIED BY OTHERS) SEE UOP PROJECT SPECIFICATION 560695-312.
4. DESIGN CATALYST DENSITY: 657 KG/M³. DESIGN CERAMIC/ALUMINA BALLS DENSITY: 2000 KG/M³.
5. WORK THIS SHEET WITH SHEET 6. (1)
6. ALL DIMENSIONS ARE IN MILLIMETERS UNLESS NOTED.

Drawings Referred to In this Specification

3-320-4					

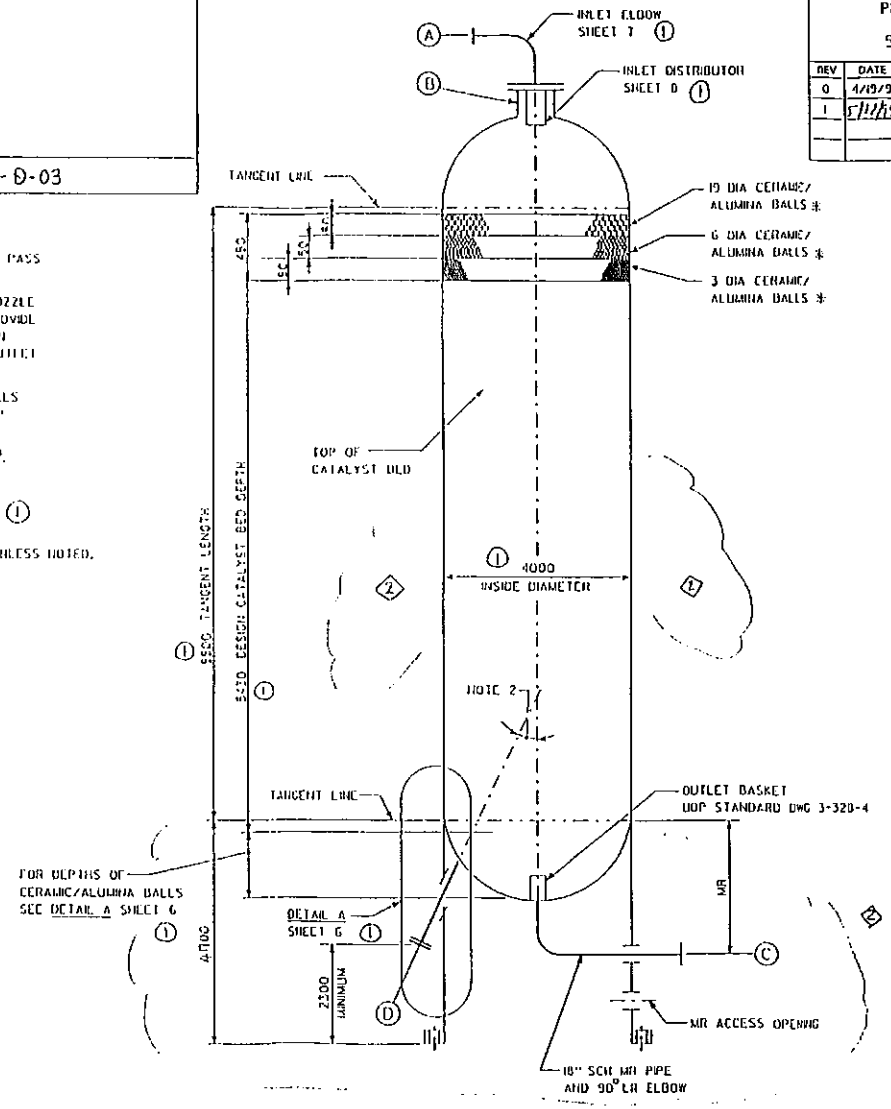

ELEVATION

*NOTE 3

C47325-B

509095

55280

CTCI CORPORATION

DS-57-D-003 (6/9)

UOP

25 East Algonquin Road • PO Box 5017 • Des Plaines, Illinois 60017-5017 • USA

REACTORS

NAME	(TATORAY) REACTOR	ITEM ~~D-5703~~ 57-D-03

PROJECT SPECIFICATION

560695 – 304 – 1 SHEET 6

REV	DATE	BY	APVD	REV	DATE	BY	APVD
0	4/19/95	BPP					
1	5/22/95	TLW	TPD				

NOTES:

WORK THIS SHEET WITH SHEET 5. (1)

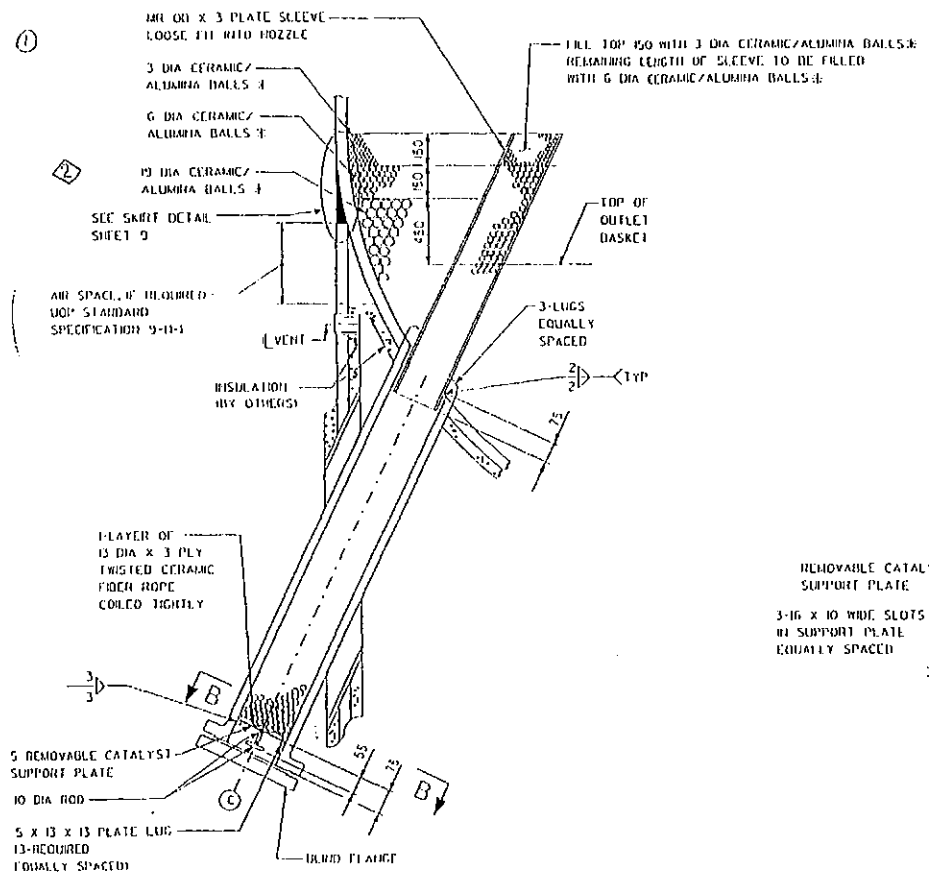

DETAIL A

* NOTE 3, SHEET 5 (1)

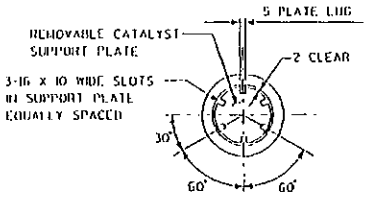

SECTION B-B

C47326

37-6

509695

CTCI CORPORATION

DS-57-D-003 (7/9)

UOP

25 East Algonquin Road • PO Box 5017 • Des Plaines, Illinois 60017-5017 • USA

PROJECT SPECIFICATION

560695- 304 - 0 SHEET 7

REV	DATE	BY	APVD	REV	DATE	BY	APVD
0	4/19/95	BPP					

REACTORS

NAME INLET ELBOW DETAIL

ITEM ~~D-5703~~ 57-D-03

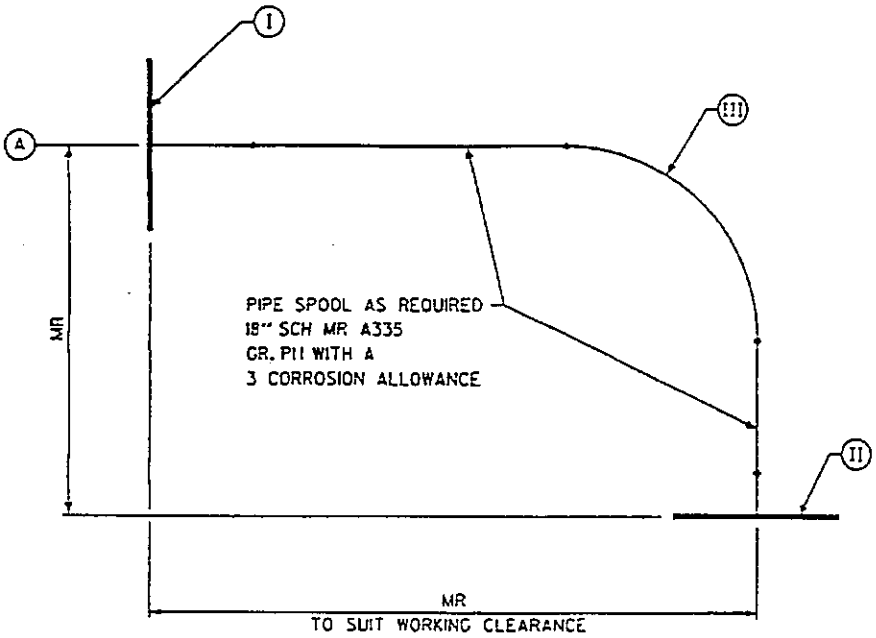

(I) 18" WELDING NECK FLANGE, A182 GR. F11 OR F12

(II) 30" ID BLIND OR WELDING NECK REDUCING FLANGE, A182 GR. F11 OR F12

(III) 18" SCH MR LONG RADIUS ELBOW A234 GR. WP11 OR WP12 WITH A 3 CORROSION ALLOWANCE

NOTES:

1. ALL FLANGE RATINGS TO BE ANSI CLASS 600. SEE GENERAL NOTES FOR ADDITIONAL INFORMATION.
2. PIPING SHALL BE FABRICATED IN ACCORDANCE WITH UOP STANDARD SPECIFICATION 8-12-3
3. FLANGE (II) SHALL BE SPECIALLY DESIGNED PER ASME SEC. VIII, DIV. I TO MATE AND MATCH WITH NOZZLE (B) ON SHEET 5.

C47327-A

21

509097 31-7

55280

CTCI CORPORATION

DS-57-D-003 (8/9)

UOP

25 East Algonquin Road • PO Box 5017 • Des Plaines, Illinois 60017-5017 • USA

PROJECT SPECIFICATION

560695- 304 - :1 SHEET 8

REV	DATE	BY	APVD	REV	DATE	BY	APVD
0	4/19/95	BPP					
1	5/12/95	TLW	TPD				

REACTORS

NAME INLET DISTRIBUTOR DETAIL

ITEM ~~D-5703~~ 57-D-03

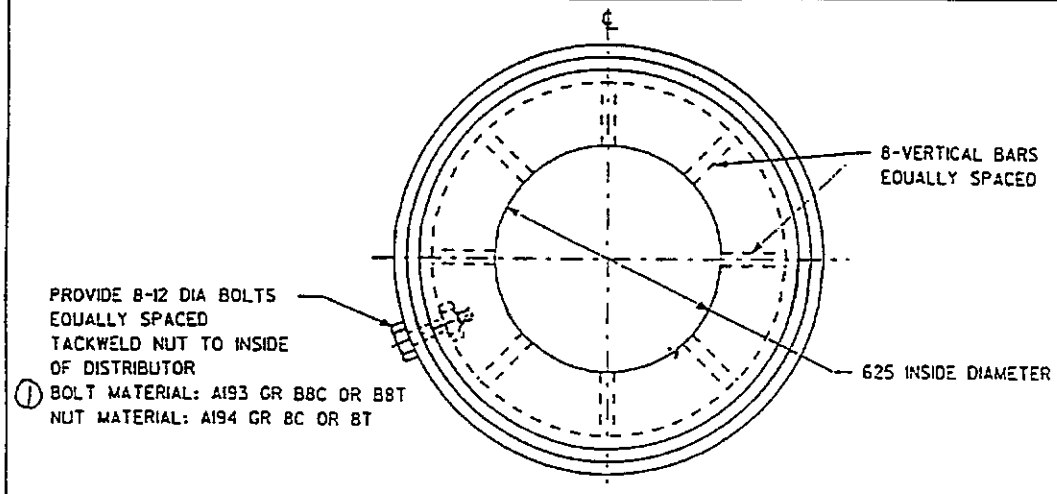

PLAN

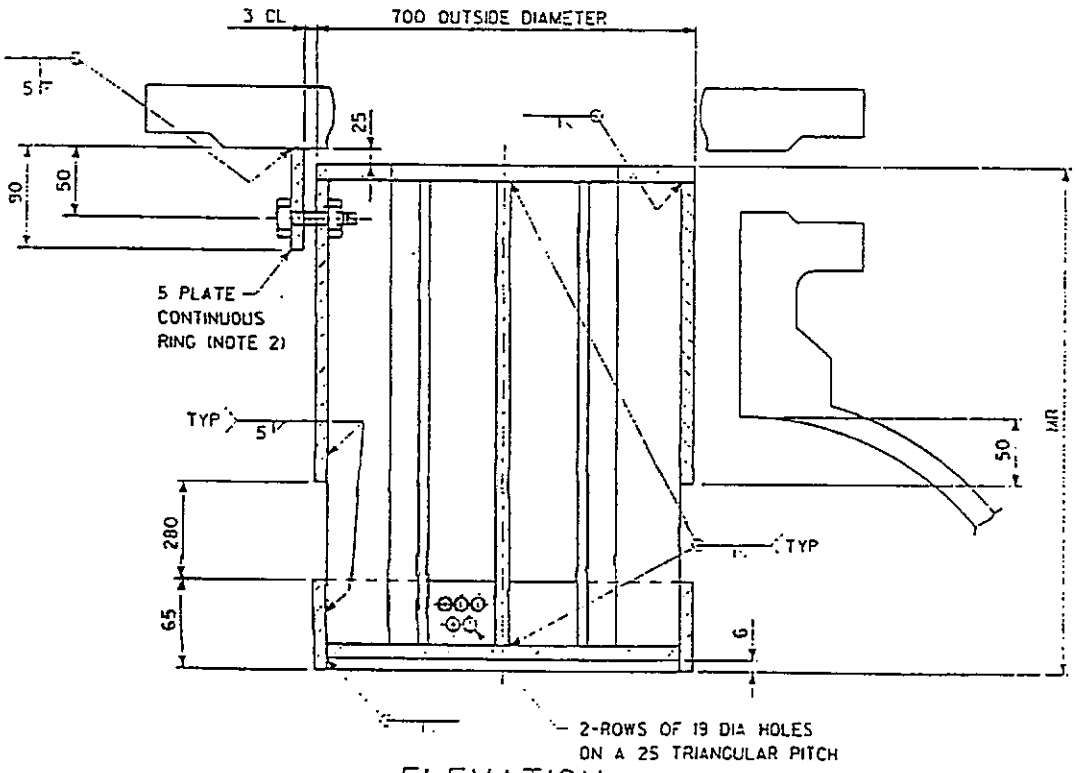

ELEVATION

NOTES:

1. ALL PLATE MATERIAL SHALL BE 5 THICK A240 GR. 347 OR GR. 321 UNLESS NOTED.
2. 5 PLATE CONTINUOUS RING MATERIAL TO MATCH FLANGE MATERIAL.
3. ALL DIMENSIONS ARE IN MILLIMETERS UNLESS NOTED.

C47328-A

93

509033

31-8

55280

CTCI CORPORATION

DS-57-D-003 (9/9)

UOP

25 East Algonquin Road • PO Box 5017 • Des Plaines, Illinois 60017-5017 • USA

PROJECT SPECIFICATION

560695 – 304 – 1 SHEET 9

REV	DATE	BY	APVD	REV	DATE	BY	APVD
0	4/19/95	BPP					
1	5/12/95	TLW	TPD				

REACTORS

SERVICE TATORAY REACTOR

ITEM NO ~~D-3703~~ 57-D-03

SKIRT DETAIL

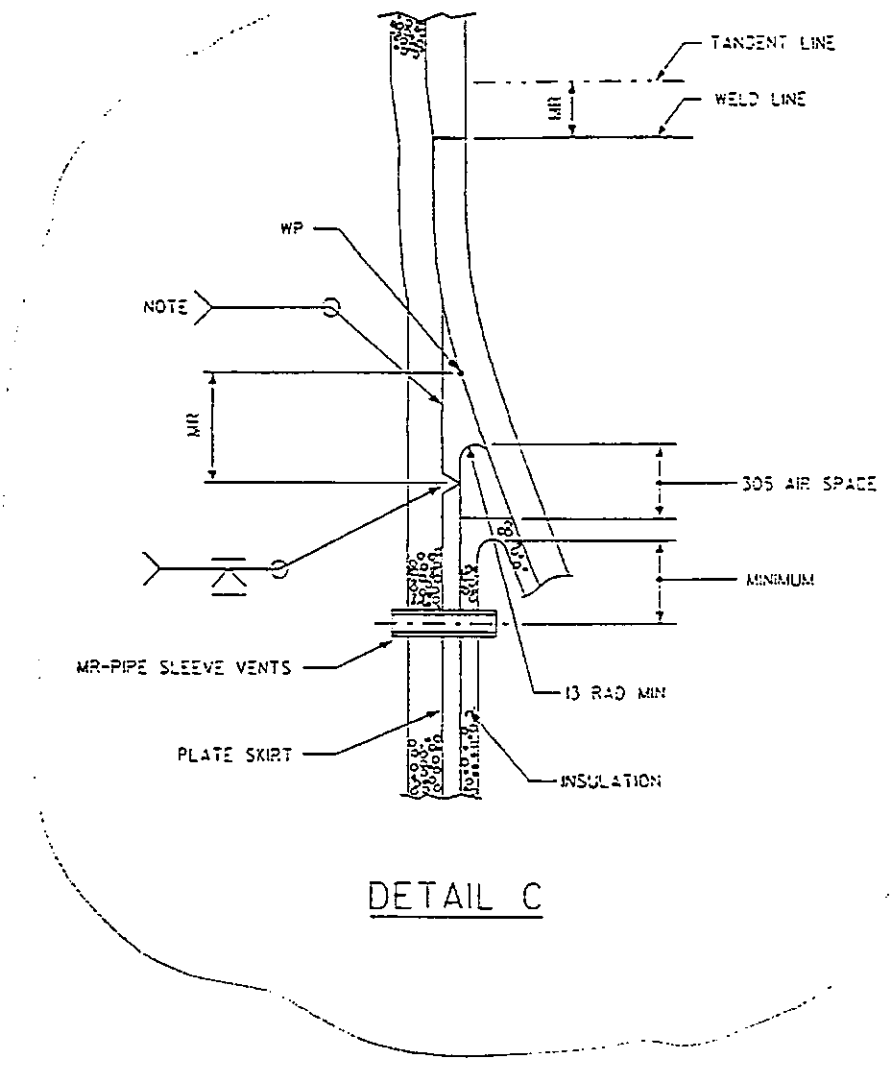

DETAIL C

NOTES:

1. THE JOINT BETWEEN THE SUPPORT SKIRT AND BOTTOM HEAD SHALL HAVE THE SMOOTH STREAMLINE GEOMETRY AS SHOWN. THE JOINT DETAIL MAY BE MADE BY FORGING A SINGLE BUTT WELDING COMPONENT INTEGRAL WITH THE VESSEL. WELD METAL BUILD UP OR BUILT UP CONSTRUCTION USING PLATE AND WELD METAL. BACKING STRIPS, IF USED, SHALL BE REMOVED AFTER WELDING. WELDS SHALL BE GROUND OR MACHINED TO A SMOOTH, FLUSH CONTOUR. 100% MAGNETIC PARTICLE OR DYE PENETRANT EXAMINATION OF ALL WELD SURFACES SHALL BE PERFORMED AFTER FINAL POSTWELD HEAT TREATMENT.

2. ALL DIMENSIONS ARE IN MILLIMETERS UNLESS NOTED.

C47329-A

55280

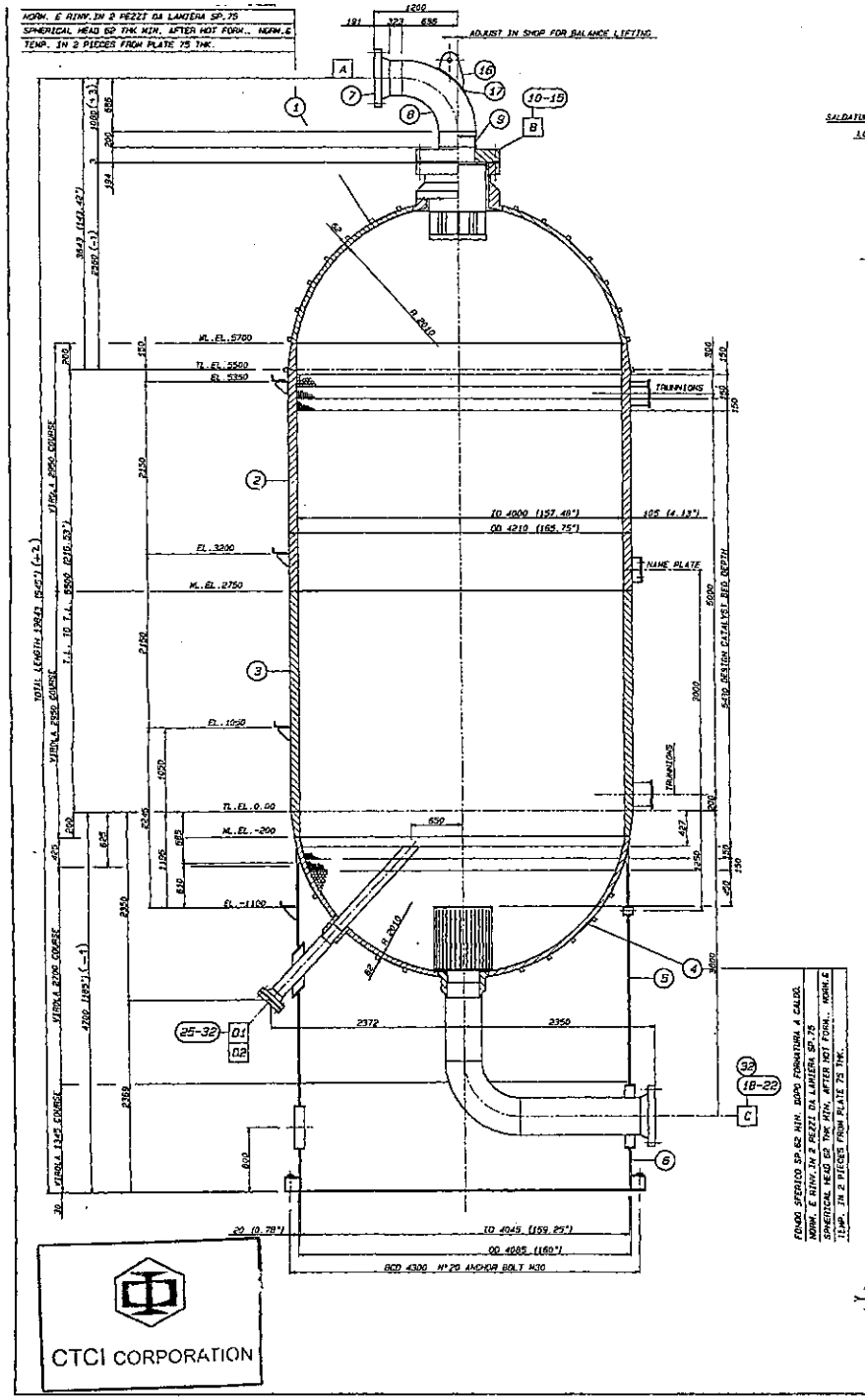

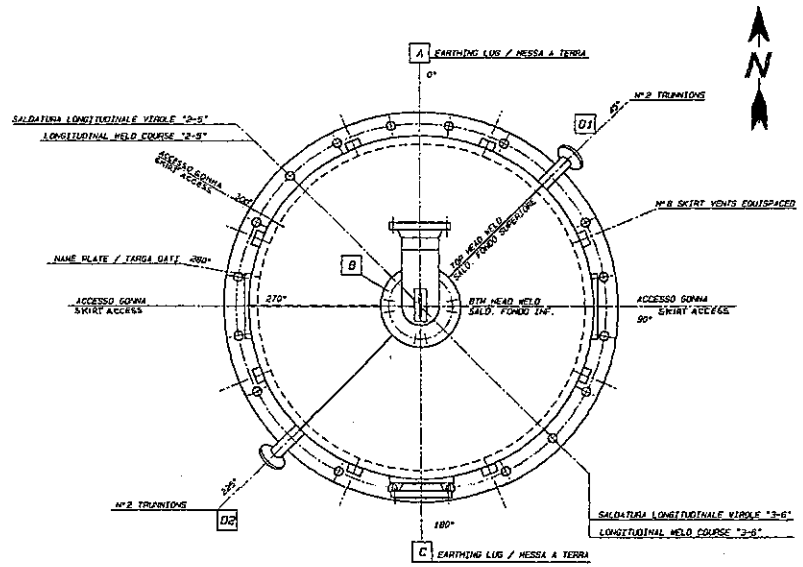

ORIENTATION VIEW FROM TOP / ORIENTAMENTO VISTO DALL'ALTO

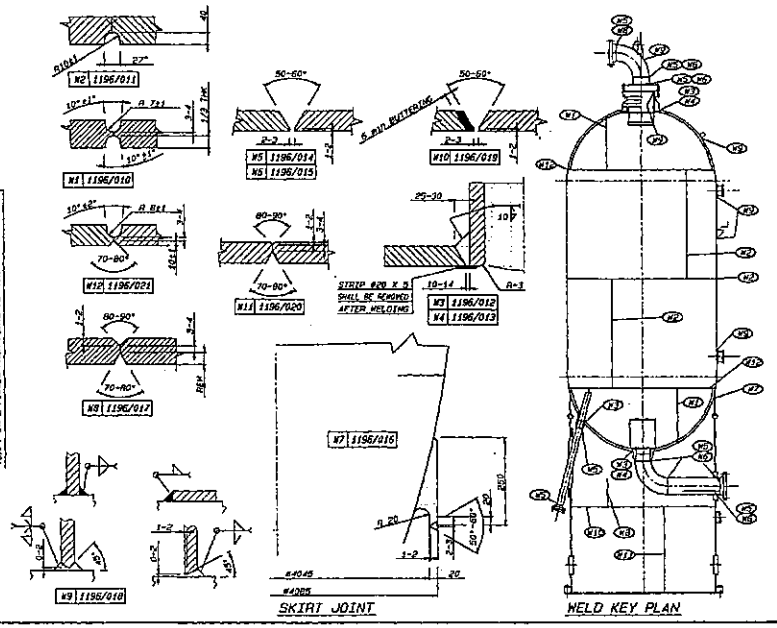

CONSTRUCTION NOTE:

1) FLANGE CONTACT FACE SHALL BE FINISH WITH 125 - 250 Ra
2) NOZZLE FLANGE STUD BOLT HOLES STRADDLE TO CENTER LINES
3) THE INDICATE THK ARE THE min. AFTER CONSTR. E OR FORMING AND ALL DIMENSIONS ARE IN mm
4) INSIDE EDGES OF NOZZLES SHALL BE REDUCED OFF WITH 6 mm RADIUS
5) WELDS ATTACHING HIGH-PRESSURE-RETAINING COMPONENTS TO PRESSURE-RETAINING COMPONENTS SHALL BE FULL PENETRATION. ALL FILLET WELDS ATTACHED TO PRESSURE-RETAINING COMPONENTS SHALL BE GROUND TO A SMOOTH CONCAVE CONTOUR.
Tutte le saldature di parti non a pressione a parti a pressione devranno essere a piena penetrazione e con filetto raccordato concavo.
6) ALL INTERNALS TO BE FABRICATED TO PASS THRU a 20" ID MANWAY.
Tutti gli interni devono passare dal passo d'uomo 630"
7) ALL INTERNALS TO BE MOUNTING BEFORE SHIPPING.
Tutti gli interni dovranno essere montati prima della spedizione

ITEM Q.TY	QT.	DN.	TYPE	RATING	THK	SCH.	GASKET / RESPECTING	PIPE / FACING	PROJECT. FACING	SERVICE
D	2	6"	WN RF	600#	41	/	SELF REINFORC		SEE DWG.	CATALYST WITHDRAWAL
C	1	18"	WN RF	600#	70.5	/	SELF REINFORC		2300	OUTLET
B	1	30"ID	SPECIAL	/	130	/	SELF REINFORC		SEE DWG.	MANWAY
A	1	16"	WN RF	600#	19	60	/	/	1200	INLET

YEAR OF CONSTR.	1997	DESIGN CODE:	ASME VIII div.1 Ed.'95
	REACTOR	SPECIFICATION:	UOP Standard Specification 3-12-2
			UOP Project Specification 560688-102

CONSTRUCTION DATA		DESIGN DATA		
FULL WATER WEIGHT	210100 kg.	DESIGN PRESS.	Bar.g/Psi.g	34 / 493 PSI
EMPTY WEIGHT + ATTACH.	/ kg	FULL VACUUM at	°C/°F	489 / 912
EMPTY WEIGHT	115000 kg.	OPER. PRESS.	Bar.g/Psi.g	/
ATTACH. WEIGHT	/ kg.	HYDROST. PRESS.DWG	Bar.g/Psi.g	85.8 / 1241
OPER. WEIGHT	/ kg.	HYDROST. PRESS.FIELD	Bar.g/Psi.g	83.8 / 1217
EXT. SURFACE	267 m²	M.A.W.P.	Bar.g/Psi.g	34.7 / 503.3
INTERNAL PROTECT.	SILICA-GEL	DESIGN TEMPERAT	°C/°F	316 / 964.4
		OPERAT. TEMPERAT	°C/°F	489 / 912
SAND.BLAST. & PAINTING	SEE RESTA SPEC. 1196/PAINT	MIN.DESIGN METAL TEMP. AT. BAR/P	°C/°F	9 / 48.2
		STEAM-OUT		/
		RADIOGRAPHY		FULL
		STRESS RELIEVING		YES
REFERENCE DRAWINGS		WELDING EFFICIENCY		1
DETAILS DWG	4647/A	PRODUCT TEST COUPON		SEE WF 4647/WP
PART LIST DWG	4647/B	CORROSION ALLOWANCE	mm	3
NAME PLATE DWG	4647/C	SPECIAL SERVICE		/
LOADING DATA	4647/D	FLUID		/
TRANSPORTATION DWG	4647/E	CAPACITY	m3	103.1
PRESS. CALCULATIONS	4647/F	GRAVITY OF PROCESS FLUID		
NOZZLES LOAD CALCUL.	4647/G	HYDROST. WATER TEMP.	°C/°F	16 / 61
SUPPORTS CALCULATION	4647/H	HYDROSTATIC TIME	h	5
WPS & PQR	4647/WP	INSULATION BY OTHERS	mm	125
INLET DISTRIBUTOR	8.96.068	FIREPROOFING BY OTHERS	mm	75
OUTLET BASKET	8.96.068	INSPECTION BY		ASME AUTHORITY
EXTERNAL CLIPS	4647/L	"U" STAMP REQUIRED		YES

AS BUILT DWG
Date 21-03-'97

ASME STAMP REQUIRED

APPROVED BY ENGINEER. MANAGER — SIGNE — DATE
APPROVED BY QUAL. CONTR. MANAGER — SIGNE — DATE

REVIEWED BY AUTHOR. INSPECTOR

DATE

NATIONAL BOARD NUMBER

ITEM: 57-D-03 N°

N.	REVISIONS DESCRIPTION	SIGNE	CHECK	APPR.	DATE
0	ISSUED FOR APPROVAL/EMESSO PER APPROVAZIONE				
1	REVISED ACCORDING TO CLIENT COMMENTS				
2	REVISED AS MARKED				
3	REVISED AS MARKED				
4	REVISED AS MARKED				

OFFICINE LUIGI RESTA S.p.A.
TELEX 300572-TELEFAX 665348
SCANZOROSCIATE (Bgi-Corso Europa, 49-Tel. (035) 581.130

CLIENT:	CHIYODA Corporation	DATE	16-04-1996
	ISM FRESNO AROMATICS PROJECT	DWG. AUT.	GALLITTA STEFANO
		CHECK.	
		APPROV.	
		SCALE	NONE
SERVICE:	YATORAY REACTOR	JOB.	11/96/2
	ITEM: 57-D-03	N.F. SHOP N	4840
	ASSEMBLY 061166	DIS. DWG.	4647 REV 4

P.O. N°: SAYPO40007

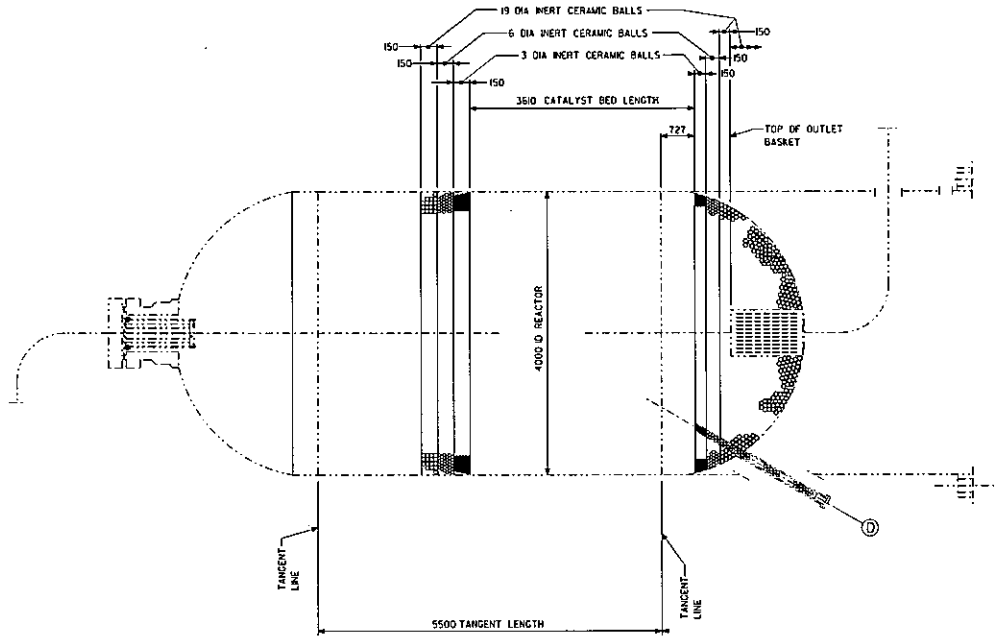

REACTOR SECTIONAL ELEVATION

LEGEND

NEW

EXISTING

DESIGN DATA

SPECIFICATION:

DESIGN CONDITIONS:

INTERNAL: 34 bar (g) @ 518°C

EXTERNAL: FULL VACUUM @ 489° C

MINIMUM DESIGN METAL TEMPERATURE:

OPERATING CONDITIONS: MAXIMUM 495°C

RADIOGRAPH :

POSTWELD HEAT TREAT :

JOINT EFFICIENCY :

REACTOR HEADS :

MATERIAL: (UNLESS NOTED)

SHELL AND HEADS :

INTERNAL PLATE :

INTERNAL BOLTING :

CORROSION ALLOWANCES

CATALYST AND INERT CERAMIC BALL DESIGN DATA

DESIGN CATALYST DENSITY: 715 kg/m^3

DESIGN CERAMIC/ALUMINA BALLS DENSITY: 2160 kg/m^3

ACCESSORIES SUPPLIED BY FABRICATOR:

LADDERS AND PLATFORM CLIPS :

INSULATION CLIPS AND RINGS :

REACTOR SUPPORT SKIRT :

NOZZLES AND MANWAYS

MARK	NO	SIZE INCHES	SERVICE	REMARKS
	1	18	INLET	
	1	30 ID	MANWAY	
	1	18	OUTLET	
O	2	6	CATALYST WITHDRAWAL	CUSTOMER/CONTRACTOR RESPONSIBLE FOR ANY MODIFICATION TO WITHDRAWAL NOZZLE SLEEVE TO ENSURE IT IS AT APPROPRIATE LEVEL WITHIN THE REACTOR PER UOP STANDARD DRAWING 3-335. FILL TOP 150 OF SLEEVE WITH 3 DIA INERT CERAMIC BALLS. FILL REMAINING LENGTH OF SLEEVE WITH 6 DIA INERT CERAMIC BALLS.

NOTES:

1. WORK THIS DRAWING WITH UOP PROJECT SPECIFICATION 951609-304.
2. ALL INERT CERAMIC BALLS SHALL BE TYPE I AND SHALL COMPLY WITH THE REQUIREMENTS OF UOP STANDARD SPECIFICATION 3-37.
3. ALL DIMENSIONS ARE IN MILLIMETERS UNLESS NOTED.
4. CUSTOMER/CONTRACTOR SHALL VERIFY THAT THE STRUCTURAL AND MECHANICAL CONDITION OF THE EXISTING VESSEL, SUPPORT AND FOUNDATION ARE SATISFACTORY FOR CONTINUING OPERATION AT THE REVAMP DESIGN CONDITIONS AND UNDER CURRENT APPLICABLE CODES AND PRACTICES.
5. CUSTOMER/CONTRACTOR TO VERIFY EXISTING DIMENSIONS IN FIELD.
6. NOZZLES NOT LISTED IN THE NOZZLE DESIGNATION TABLE ARE NOT REQUIRED BY UOP AND HAVE NOT BEEN REVIEWED.

CTCI CORPORATION

SCALE: NONE

REV	DFTR	CKR	APVD	DATE	REV	DFTR	CKR	APVD	DATE

UOP LLC
25 East Algonquin Road
Des Plaines, Illinois 60017-5017 USA

REACTOR SECTIONAL ELEVATION
ITEM NO. 57-D-03
TATORAY PROCESS UNIT

ARABIAN INDUSTRIAL FIBERS COMPANY DBN RUSHDI
IR-2 PROJECTS: SULFOLANE AND AROMATICS DBN PROJECT
YANBU, KINGDOM OF SAUDI ARABIA

DFTR	CKR	APVD	DATE	PROJECT	TYPE	DWG NO	REV
PRK	PRK	RTS	06MAY 09	951609	-304-	01-A1	0

CTCI CORPORATION

Revision Indication

uop

UOP LLC • 25 East Algonquin Road • Des Plaines, Illinois 60017-5017 • USA

REACTORS

PROJECT SPECIFICATION

932685 — **304** SHEET 1

REV	DATE	BY	APVD	REV	DATE	BY	APV
0	03NOV06	SJS	JRG				

Tatoray Process Unit (Revamp)

	Sheet
General Notes	2
List of Reactor Drawings	2

AS-BUILT

55280

CTCI CORPORATION

Revision Indication

UOP

UOP LLC • 25 East Algonquin Road • Des Plaines, Illinois 60017-5017 • USA

REACTORS

PROJECT SPECIFICATION

932685 — **304** SHEET 2

REV	DATE	BY	APVD	REV	DATE	BY	APV
0	03NOV06	SJS	JRG				

General Notes

- Notes Applicable For Existing Reactor

A. Customer/Contractor shall verify that the structural and mechanical condition of the existing reactor, support and foundation are satisfactory for continuing operation at the revamp design conditions and under current applicable codes and practices.

B. Customer/Contractor to verify existing dimensions in field.

C. Vacuum design is specified for reactor that can undergo a vacuum condition for the following scenarios:

1. Process fluid is allowed to cool.
2. Vacuum condition during start-up or shutdown.

List of Reactor Drawings

For reactor details see the following UOP Drawings:

Drawing Number	Revision	Title
932685-304-01-A1	0	Reactor Sectional Elevation
932685-304-02-A1	0	Catalyst Withdrawal

List of Fabricator Drawings

The following drawings were used as reference material for UOP drawings 932685-304-01-A1 and 932685-304-02-A1:

Fabricator	Drawing Number	Revision	Title
OFFICINE LUIGI RESTA	4647	4	Tatoray Reactor Assembly
OFFICINE LUIGI RESTA	4647/A	0	Reactor Details
COSTACURTA	B.96.669	3	Removable Internals Tatoray Reactor

AS-BUILT

55280

55280

932685-304-02-A1

New.

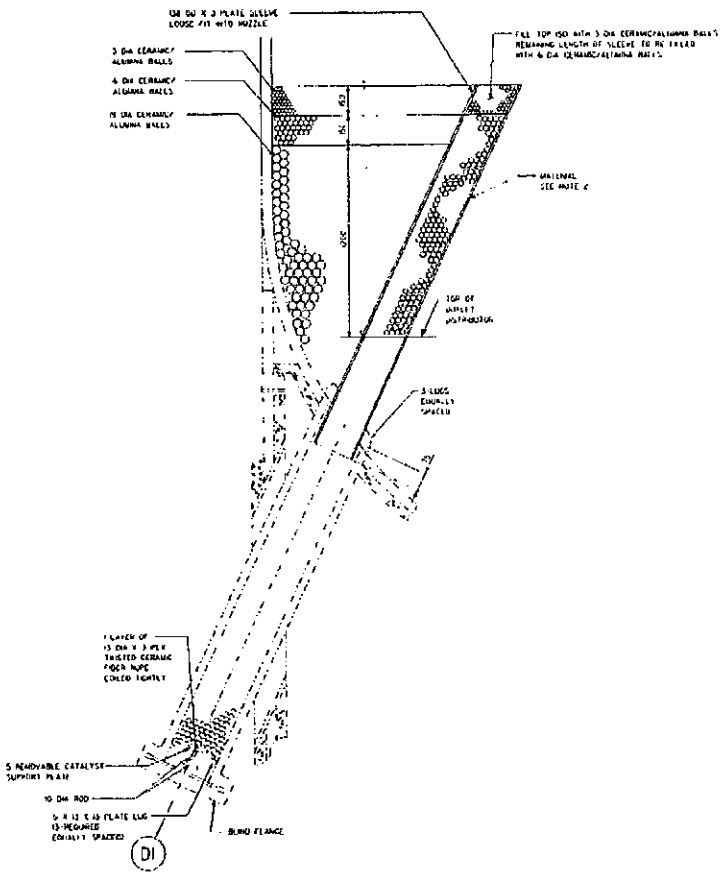

DETAIL A02
ALTERNATE 1

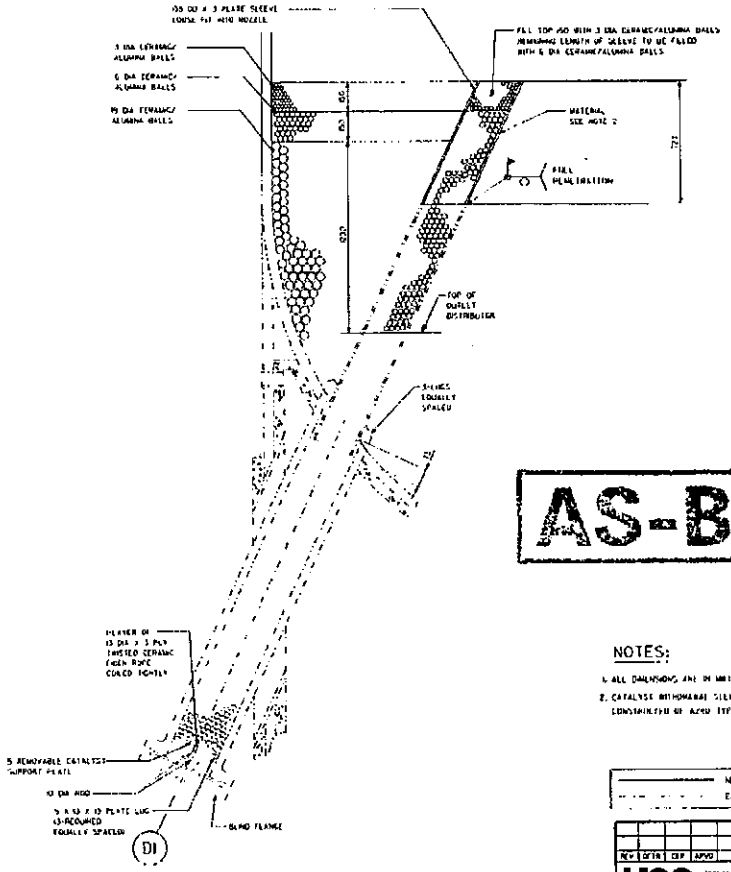

DETAIL B02
ALTERNATE 2

AS-BUILT

NOTES:

1. ALL DIMENSIONS ARE IN MILLIMETERS UNLESS NOTED.
2. CATALYST WITHDRAWAL SLEEVE SHALL BE CONSTRUCTED OF A240 TYPE 321.

NEW
EXISTING

CTCI CORPORATION

SCALE: NONE

REV	DRTR	CKR	APVD	DATE	REV	DRTR	CKR	APVD	DATE

UOP LLC
25 East Algonquin Road
Des Plaines, Illinois 60017-5017 USA

CATALYST WITHDRAWAL
ITEM NO. 57-D-03
FATORRY PROCESS UNIT

SAUDI ARABIAN INDUSTRIAL FIBERS COMPANY (SIF) JUBAIL
JUBAIL, KINGDOM OF SAUDI ARABIA

DRTR	CKR	APVD	DATE	PROJECT	TYPE	DWG NO	REV
SAN	JMC	JMC	NOV 2006	932685-304-02	A1		0

932685-304-01-A1

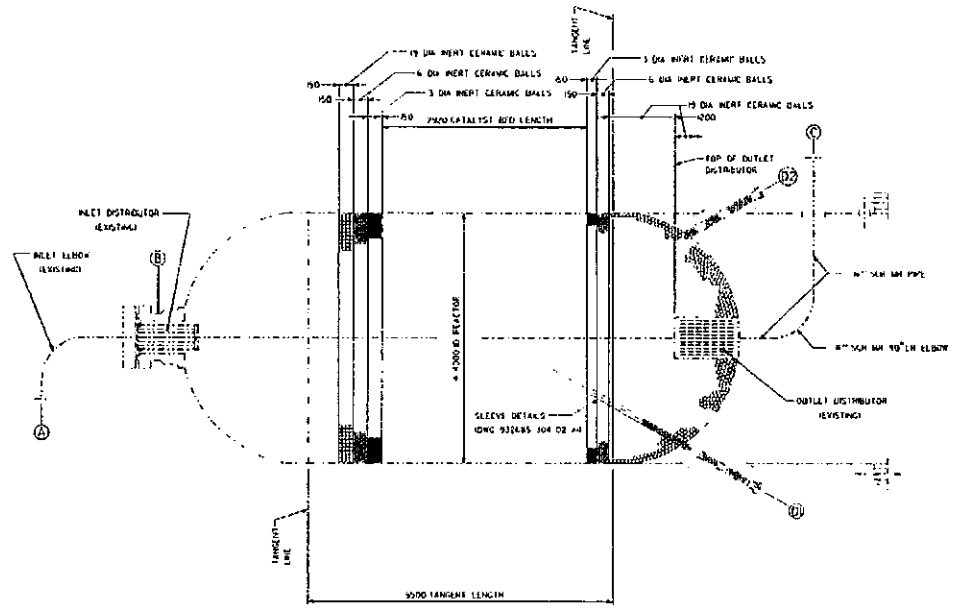

REACTOR SECTIONAL ELEVATION

AS-BUILT

DESIGN DATA

CODE: ASME SECTION VIII, DIVISION 1

SPECIFICATION: UOP PROJECT SPECIFICATION 932685-304
UOP STANDARD SPECIFICATIONS 3-37, 3-14, 8-11

REVAMP DESIGN CONDITIONS:	INTERNAL:	32.4 bar(g) @ 527°C (SEE NOTE 2)
	EXTERNAL:	FULL VACUUM @ 482°C (SEE NOTE 2 AND 4)
	MINIMUM DESIGN METAL TEMPERATURE:	9°C (SEE NOTE 2)

RADIOGRAPHY : *
POSTWELD HEAT TREAT : *
JOINT EFFICIENCY : *
REACTOR HEADS : *

* SEE UOP PROJECT SPECIFICATION 932685-304 SHEET 2 FOR LIST OF FABRICATOR DRAWINGS. VALUES ARE TAKEN FROM FABRICATOR DRAWINGS.

MATERIAL: (UNLESS NOTED)

SHELL AND HEADS : *
INTERNAL PLATE : *
INTERNAL BOLTING : *

CORROSION ALLOWANCE

*

CATALYST AND INERT CERAMIC BALL DESIGN DATA

DESIGN CATALYST DENSITY: 700 kg/m³
DESIGN CERAMIC/ALUMINA BALLS DENSITY: 2160 kg/m³

ACCESSORIES SUPPLIED BY FABRICATOR:

LADDERS AND PLATFORM CLIPS : *
INSULATION CLIPS AND RINGS : *
REACTOR SUPPORT SKIRT : *

NOZZLES AND MANWAYS

MARK	NO	SIZE INCHES	SERVICE
A	1	*	INLET
B	1	*	MANWAY
C	1	*	OUTLET
D1	1	*	CATALYST WITHDRAWAL
D2	1	*	INERT CERAMIC BALL WITHDRAWAL

ALL EXTERNAL CONNECTIONS SHALL BE ANSI CLASS * RAISED FACE.

INERT CERAMIC BALL VOLUMES

BOTTOM BED VOLUME: 3.8 m³
MAIN BED VOLUME: 3.8 m³
TOTAL BED VOLUME: 45.3 m³

NOTES:

1. ALL DIMENSIONS ARE IN MILLIMETERS UNLESS NOTED.
2. SEE UOP PROJECT SPECIFICATION 932685-304 SHEET 2 NOTE 1.
3. ALL INERT CERAMIC BALLS SHALL COMPLY WITH THE REQUIREMENTS OF UOP STANDARD SPECIFICATION 3-37 AND TYPE L.
4. SEE UOP PROJECT SPECIFICATION 932685-304 SHEET 2 NOTE 4.

NEW
EXISTING

CTCI CORPORATION

REV	DESN	CHK	APVD	DATE	REV	DESN	CHK	APVD	DATE

UOP LLC
25 East Algonquin Road
Des Plaines, Illinois 60017-5017 USA

REACTOR SECTIONAL ELEVATION
ITEM NO. 57-D-03
TATORAY ENGINEERING COMPANY

ARABIAN INDUSTRIAL FIBERS COMPANY (AIC) JUBAIL
KINGDOM OF SAUDI ARABIA

DESN	CHK	APVD	DATE	PROJECT	TYPE	DWG NO	REV
SJS	JRG	JAK	NOV 15 2006	932685-304-01-A1			0

SCALE: NONE

sabic

ARABIAN INDUSTRIAL FIBERS COMPANY

IR-II AROMATICS PROJECT

PROJECT NO. 10E0541A01

DOCUMENT TITLE:

REGENERATION GAS DRIER DATA SHEET

DOCUMENT NO:

DS-57-DA-512

REV	DESCRIPTION	BY	CHK.	APPR.	DATE
2	Revised As Marked	CAG	CMW	YSL	14-Nov-11
1	Issued For Design	CAG	CBC	YSL	26-Apr-11
0	Issue For Approval	CAG	CMW	YSL	9-Mar-11

ابن رشد ibn rushd

ARABIAN INDUSTRIAL FIBERS COMPANY YANBU, KINGDOM OF SAUDI ARABIA

CTCI CORPORATION

CERTIFIED

PROJ. MGR _____ DATE _____

CLIENT _____ DATE _____

PAGE 1 OF 2

XC32B-57-512

GN-502 84.10

55401

CONTENTS

Attachment total 2 pages.

ابن رشد ibn rushd	**VERTICAL VESSEL DATASHEET**	Contract: 10E0541A01 Equip. No.: 57-D-12 A-C Revision: 2 Date: 14-Nov.-2011 Unit: 57 - Tatoray PO No.: Document No. DS-57-DA-512 Sheet: 1 of 2	سابك sabic CTCI CORPORATION

REV

CLIENT: Arabian Industrial Fibers Company (Ibn Rushd) **PLANT:** Tatoray

SERVICE: Regeneration Gas Drier **SITE:** Yanbu, Kingdom of Saudi Arabia

DESIGN SKETCH

VESSEL DIMENSIONS: ID: 4102 mm T/T: 7303 mm

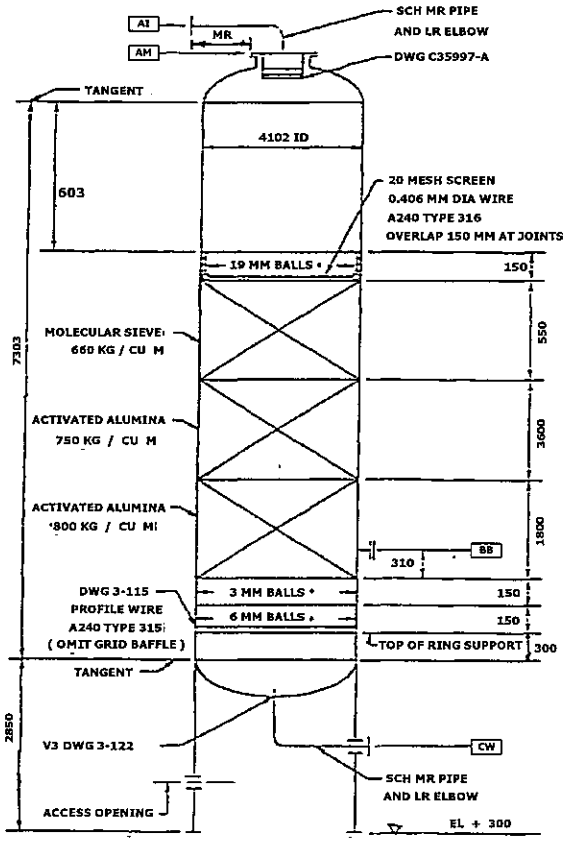

DESIGN CONDITIONS

Pressure:	(Note 2)	bar(g)	at	(Note 2)	°C
Vacuum:	FV	bar(g)	at	260	°C
Min. Metal Temperature:	9 (Note 13)	°C	at	MAWP	bar(g)
Liquid Level:	EMPTY				mm
Specific Gravity of Liquid:	N/A		at		°C

OPERATING CONDITIONS

Pressure:	(Note 3)	bar(g)	at	(Note 3)	°C
Vacuum:		bar(g)	at		°C
Low Temperature:		°C	at		°C
Hydrogen Partial Press.		bar(g)	at		°C

INTERNALS & INSULATION

DESCRIPTION	Bulk Density kg/cm3	Liquid Holdup vol%	Pressure Drop bar
Packing:			
Catalyst:			
Mist Eliminator:			
Insulation	Hot ■	Cold ☐	
Fire Proofing	Yes ☐	No ☐	

CONSTRUCTION

	Materials	Corrosion Allowance
Shell:	SA-516-70	3 mm
Head	SA-516-70	3 mm
Body flange		mm

SPECIAL CONDITIONS

Stress Relieve (Process Reason Only):	Yes ☐	No ☐
Vessel in Wet Sour Service:	Yes ☐	No ☐
Steamout Required:	Yes ☐	No ■

See Notes on Page 2

FLUOR'S OPINION OF THE ESTIMATED MECHANICAL WEIGHTS	(kg)
FABRICATED	
EMPTY	
OPERATING	
FULL OF WATER	

FLUOR'S OPINION OF THE ESTIMATED WALL THICKNESS	(mm)
TOP HEAD	
SHELL	
BTM HEAD	
LEG	

55401

ابن رشد ibn rushd	VERTICAL VESSEL DATASHEET	Contract: 10E0541A01	سابك sabic
		Equip. No.: 57-D-12 A-C	
		Revision: 2 Date: 14-Nov.-2011	
		Unit: 57 - Tatoray	
		PO No.:	
		Document No. DS-57-DA-512	CTCI CORPORATION
		Sheet: 2 of 2	REV

NOZZLE SCHEDULE

Tag	Qty.	Size in	Pressure Rating	Description
AI	1	20	150# RFWN	INLET
AM	1	30	150# RFWN	MANWAY
BB	1	24	150# RFWN	MANWAY
CW	1	20	150# RFWN	OUTLET

NOTES:

1. Three vessels required, existing vessels marked as. no.57-D-12 A-C, formerly 51-D-12 A-C of the Cyclar Unit and shall be constructed in accordance with UOP standard Specification 3-11.
2. Design conditions: Normal = 11.1 bar (g) @ 120 °C; Regeneration = 8.3 bar (g) @ 290 °C.
3. Operating conditions: Normal = @ 40 °C; Regeneration = @ 215 °C. 2
4. Vessel Heads=Top: 2:1 Elliptical; Bottom: 2:1 Elliptical.
5. The drier package shall be furnished with the necessary equipment for automatic switching of the adsorbers through the adsorption and regeneration steps.
6. Furnish complete skid mounted package with all necessary piping, valves, etc. for the design conditions specified.
7. Bed material and ceramic/alumina balls to be provided by others.
8. Following UOP standards apply: 3-11-6, 3-116-4, 3-122-0 and C35977-A-0.
9. ASME Code stamp is required.
10. Insulation clips & rings are required.
11. Ladder & Platform Clips: as required.
12. Vessel support: Yes.
13. The min. design ambient temperature should be 6°C.

55401

CTCI CORPORATION

CHIYODA CORPORATION

FOR RECORD

CLIENT	IBN RUSHD
PROJECT	PTA & AROMATICS -
TITLE	AROMATICS
JOB NO.	51046
DOC. NO.	DS-51-D-012 (1/1)

		REVISIONS ①	②	③	④
MARK					
APRD					
CHKD					
MADE					
DATE	Mar.03 '96	Apr.19'96	Jan 30'97		

UOP

25 East Algonquin Road • PO Box 5017 • Des Plaines, Illinois 60017-5017 • U.S.A.

VESSELS

PROJECT SPECIFICATION
560689 - 301 - 2 SHEET 14

REV	DATE	BY	APP'D	REV	DATE	BY	APP'D
0	15-2-95						
1	15-11-95	MAG	MAG				
2	1-5-96	MAG	MAG				

SERVICE: RECYCLE GAS DRIERS (THREE REQUIRED)

ITEM NO: ~~D-512A, B, C~~ 51-D-12ABC

Design Conditions at Top	INT NOTE-C	* °C	(*) BY CONTRACTOR
	EXT FULL VACUUM	*210°C	②
	Metal Temperature (Min)	9°C	
Operating Conditions	NORMAL	35°C	
	REGENERATION	250°C	
Radiograph		NR	
Postweld Heat Treat		NR	
Joint Efficiency		NR %	

Material Specifications

Heads	SA516-70
Shell	SA516-70

Shell	Thickness Required by Code-mm.	Corrosion Allowance mm. (Min)
		3

Heads		
		3

Vessel Heads

Top Head	2:1 ELLIPTICAL
Bottom Head	2:1 ELLIPTICAL

Accessories Applied by Fabricator

Ladder & Platform Clips	AS REQUIRED (*)
Insulation Clips & Rings	YES
Vessel Support	YES

Nozzles and Manways

Mark	No	Size Inches	Service
AI	1	20	INLET
AM	1	30	MANWAY (*)
BB	1	24	MANWAY
CV	1	20	OUTLET

Class - ANSI CL150 (*) SHEET 2-NOTE A

Facing - RAISED FACE

Normal Liquid Level = EMPTY

Specific Gravity = N/A

SCHEMATIC ELEVATIONS OF BED SUPPORT MATERIALS MAY NOT BE REPRESENTATIVE OF ACTUAL DIMENSIONS.

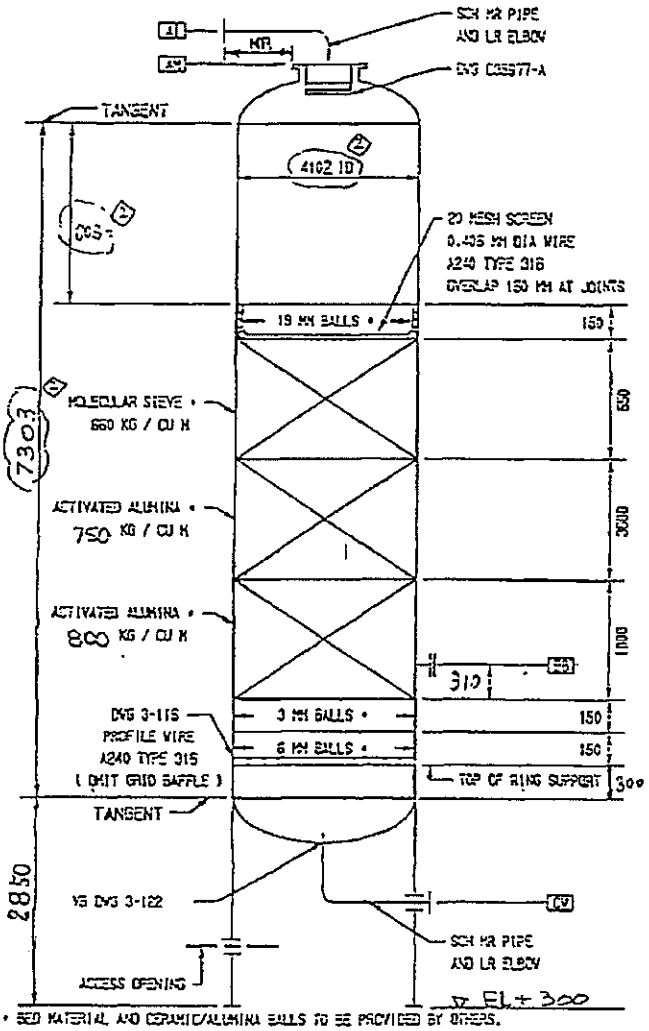

* BED MATERIAL AND CERAMIC/ALUMINA BALLS TO BE PROVIDED BY OTHERS.

NOTES: 1) DESIGN CONDITIONS: NORMAL = 11.1 BAR (G) @ 120 DEGREE C.
REGENERATION = 8.0 BAR (G) @ 290 DEGREE C.

Drawings Referred to in this Specification

3-116-4	3-122-0	C35977-A-0

509160 41

55401

55401

CTCI CORPORATION

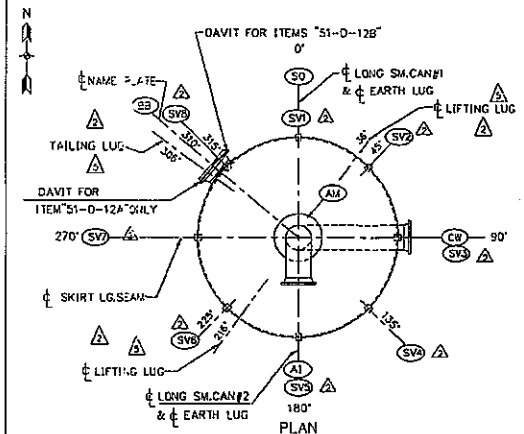

FOR ITEMS MK"51-D-12A & B"

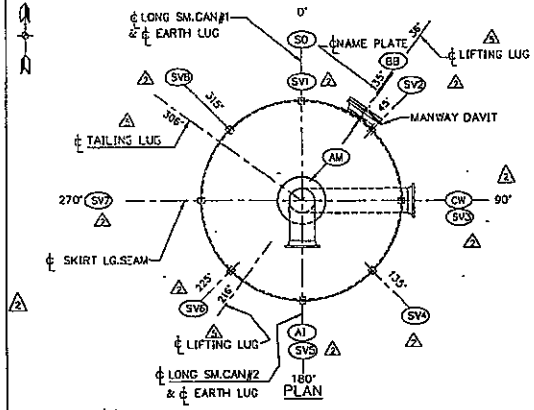

FOR ITEMS MK"51-D-12C"

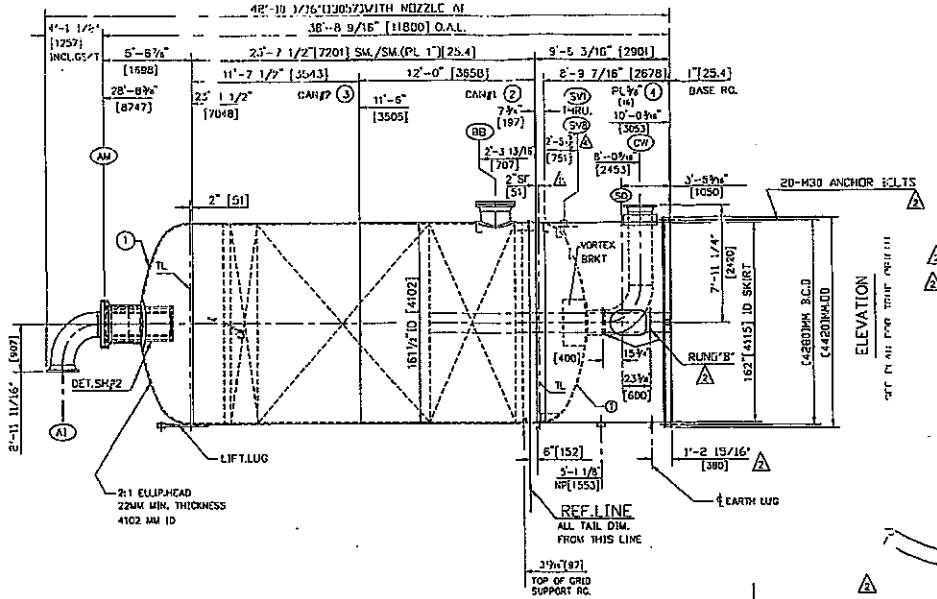

ITEM NO.	UNIT QTY	TOT. QTY.	DESCRIPTION	MATERIAL	REMARKS	PART NAME
			XXXXXXXXXXXXXXXXXXXXXXXXXXXX			
1	2	6	2 PL WITH INK. X 161 1/2" ID COOT 2:1 ELLIPTICAL HEAD W/ 2" SF.	SA-516-70 SEE HOLES, SHT#3(DESIGN DATA)		HEADS
2	1	3	PL 1" X 144" X 510 1/2" LG.	SA-516-70		CANS#1
3	1	3	PL 1" X 140" X 510 1/2" LG.	SA-516-70		CANS#2
4	1	3	PL 5/8" X 108" X 510 7/8" LG.	SA-516-70		SM.CAN
5	1	3	24"-150#RF.WN.FLG., 23"BORE. **	SA-105		BB FLG.
6	1	3	24"-150# RF. BLIND FLG. **	SA-105		BB BLD
7	1	3	PL 1/2" X 8 5/16" X 73 13/16" LG.	SA-516-70		BB NECK
8	1	3	1" X 37 1/4" X 37 1/2" LG.	SA-516-70		BB PAD
9	3	9	.177" [4.5mm]INK.GSKT.FOR 24"-150#RF.FLG.	SPIRAL WOUND	(6)SHIPLOOSE	BB GSKT
			. 316 SS WINDINGS, GRAPHITE FILLER W/ 316SS INNER RG.			
10	22	66	1 1/4"-8UN X 7 1/8" LG. STUDS	SA-193-B7	(6)SHIPLOOSE	STUDS
			W/ (2) HVY. HEX. NUT EACH	SA-194-2H		NUTS
11			DELETED			
12	2	6	PL 1/2" X 1 1/2" X 5 3/4" LG.	SA-240-304		EARTH LUG
13	2	6	PL 1 1/2" X 16" X 42 1/16" LG.	SA-516-70 N.		LIFT. LUG
14	4	12	PL 1 1/8" X 7 1/8" OD X 3 3/8"ID	SA-516-70		LIFT. LUG
15	2	6	BAR 3/4# X 2'-9 1/2" LG.	SA-516-70		"50"RUNGS

** 125-250 RMS [3.2-6.3MICRON] FLANGE FINISH
MAX.CARBON CONTENT OF CARBON STEELS SHALL BE LIMITED TO 0.25%
ALL DIMENSIONS SHOWN IN BRACKETS ARE IN MILLIMETERS

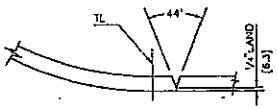

HEAD TO SHELL BEVEL

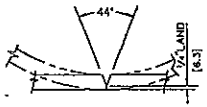

TYP.SHELL LONG & GIRTH SEAMS BEVEL

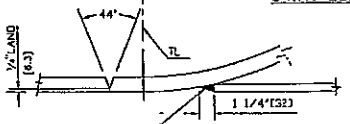

SHELL TO HEAD TO SKIRT DET.

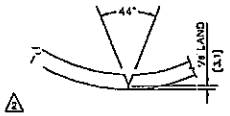

SKIRT LG.SEAM BEVEL

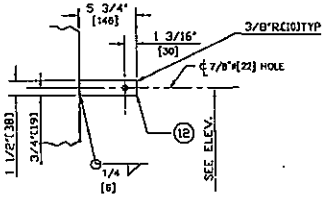

DET.OF EARTH LUG
(2) REQ'D PER TANK

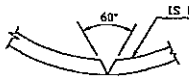

DET.BEVEL FOR MK"BB"NECK

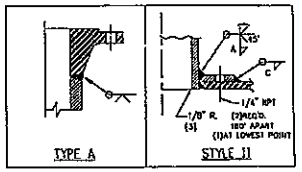

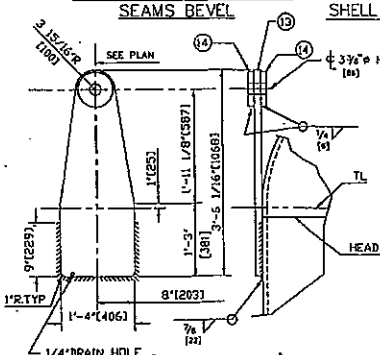

DET.OF LIFTING LUG
(2) REQ'D

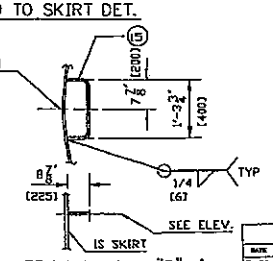

DET.OF RUNG MK"B"
(2) REQ'D

CERTIFIED
BY: D. Bassi
DATE: 6-4-07

MARK	REQ'D.	SIZE	RATING	SERVICE	NOZ. PL. OR SCH.	CL VESSEL	OUT. OVER.	I.D.	THK.	MATL	TYPE	STYLE	A	B	C	W	X	Y	Z	DETAIL SHT/#	REMARKS	O.D. NECK	MARK
SV1-8	8	4"	---	SKIRT VENT	SCH40	------	---	---	---	---	---	---	---	---	---	---	---	---	---	DETAIL SHT#4		4 1/2"	SV1-8
SO	1	14 1/2"	---	SKIRT OPNG.	PL 16	------	---	---	---	---	---	---	---	---	---	---	---	---	---	DETAIL SHT#4		30 3/4"	SO
SL	1	29 1/2"	---	SLEEVE AT CW	PL 16	------	---	---	---	---	---	---	---	---	---	---	---	---	---	DETAIL SHT#4		30 3/4"	SL
CW	1	20"	150#RFWN	OUTLET	PL 16	SEE ELEV.	---	---	---	---	---	---	---	---	---	---	---	---	---	DETAIL SHT#2	W/VORTEX BRKR	20 1/16"	CW
BB	1	24"	150#RFWN	MANWAY	PL 12.7	7'-9 1/16"	11 15/16"	0"	1"	6 7/16"	A	11	3/8"	---	9/16"	---	---	---	---	5,6,7,8,9,10	W/BLIND FLG.	24"	BB
AM	1	30"	150#RFWN	MANWAY	PL 12.7	SEE ELEV.	---	---	---	---	---	---	---	---	---	---	---	---	---	DETAIL SHT#2	ASTM B16.47 SERIES B	30"	AM
AI	1	20"	150#RFWN	INLET	SCH40	SEE ELEV.	---	---	---	---	---	---	---	---	---	---	---	---	---	DETAIL SHT#2		20"	AI

NOZZLE SCHEDULE

(INSIDE PROJECTION IS FROM THE LONGEST POINT.)

PRINT RECORD								
DATE	REV	FOR	NO.					
				KLN	3-05			
7-31	A	CUST	1+5	LAM	3-7	SG	HA3-07	"ISSUED CERTIFIED"
7-31	A	SHOP	3P	LAM	2-25	SG	HA2-26	ORIENTATION OF LIFTING & TAILING LUG
11-13	0	CUST	1+5	LAM	2-18	SG	DP2-19	REV.ELEVATION OF SKIRT VENTS
11-13	0	SHOP	1B	LAM	2-6	SG	DP2-17	REV.OF LIFTING LUG
12-11	1	CUST	1+5	LAM	12-11	SG	CP12/11	DET.BEVEL 6"BB",DEL.SUP'T RG. DET.&MADE GENERAL REV.
12-11	1	SHOP	1B	LAM	10-25	SG	CP11/5	ADDED INT.RUNGS & SKIRT VENT ELEVATION
2-17	2	CUST	1+5	LAM	7-31	SG		REV.PER CUST.APPV'L PRINT REC ON 9-3-96
2-17	2	SHOP	1B					ISSUED FOR APPV'L
2-19	3	CUST	1+5	BY	DATE	CHK.BY	M.S.	REVISION
2-19	3	SHOP	1B	PROJ.MGR.:DICK WILLIAMS				DATE: PH. NO.:(713)679-8044
2-28	4	CUST	1+5					
2-28	4	SHOP	1B					
3-07	5	CUST	1+5					
3-07	5	SHOP	1B					
	6	CERT	5+1					

COMMITTED TO EXCELLENCE

ALLIED INDUSTRIES, INC.
HOUSTON, TX.
ISO-9001 CERTIFIED

TITLE: (3) 161 1/2" I.D. X 23'-8" SM./SM.RECYCLE GAS DRIERS
ITEM NO.51-D-12A, B, C

CUSTOMER: CHIYODA INTERNATIONAL CORPORATION
PROJ.TITLE: IBN RUSHD PTA & AROMATICS PROJECT-AROMATICS
ARABIAN INDUSTRIAL FIBERS CO.LTD (CUST. P.O. SAYPOH0015
DESCRIPTION: ELEVATION & ORIENTATION

DRAWN BY: LAM DATE: 7-18-96
CHKD. BY: SO DATE: 7-31-96
APPROVED FOR FABRICATION JOHN DATE: 11-13-96

S/O. 4752101

DWG. NO. D96-4752101
SHT. 1 OF 10 REV. 5

010072

سابك
sabic

ARABIAN INDUSTRIAL FIBERS COMPANY

IR-II AROMATICS PROJECT

PROJECT NO. 10E0541A01

DOCUMENT TITLE:

BENZENE COLUMN DATA SHEET

DOCUMENT NO:

DS-58-CA-501

REV	DESCRIPTION	BY	CHK.	APPR.	DATE
1	Issued For Design	CAG	CMW	YSL	31-Mar11
0	Issue For Approval	CAG	CMW	YSL	9-Mar-11

ابن رشد ibn rushd

ARABIAN INDUSTRIAL FIBERS COMPANY YANBU, KINGDOM OF SAUDI ARABIA

CTCI CORPORATION

CERTIFIED

PROJ. MGR S P L for DATE 3/31'11

CLIENT _____ DATE _____

PAGE 1 OF 2

XC32A-58-501

GN-502 84.10

CONTENTS

Attachment total 1 page.

ابن رشد ibn rushd	**COLUMN DATASHEET**	**Contract:** 10E0541A01 **Equip. No.:** 58-C-01 **Revision:** 1 **Date:** 31-Mar.-2011 **Unit:** 58 - BT Fractionation **PO No.:** **Document No.:** DS-58-CA-501 **Sheet:** 1 of 2	سابك sabic CTCI CORPORATION

Client:	Arabian Industrial Fibers Company	**Plant:**	BT Fractionation
Service:	Benzene Column	**Site:**	Yanbu, Kingdom of Saudi Arabia

DESIGN SKETCH

VESSEL DIMENSIONS ID: 5200 mm T/T: 42300 mm

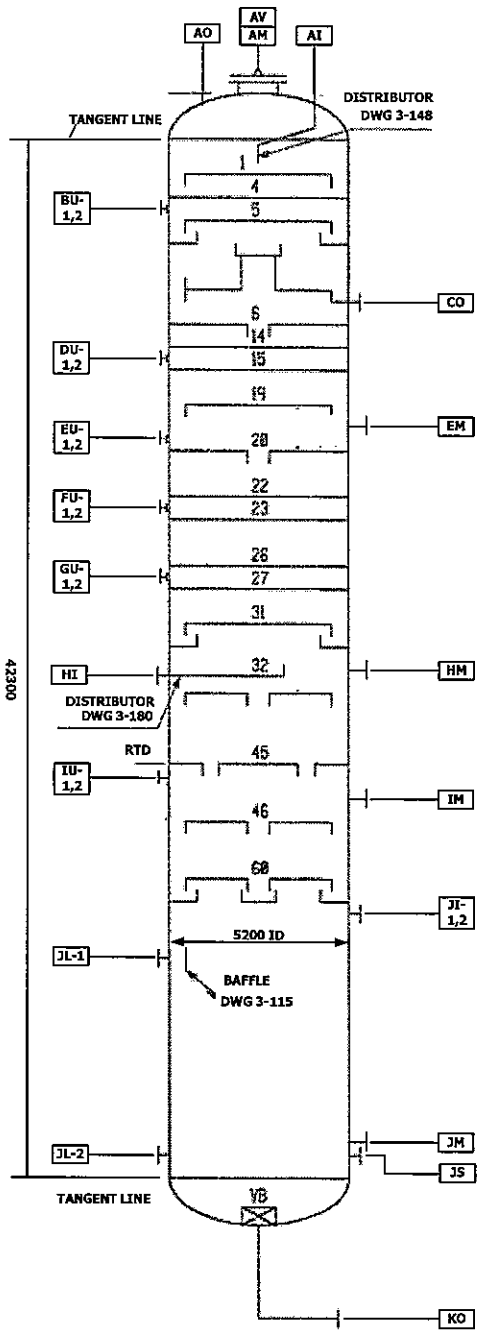

DESIGN CONDITIONS

Pressure:	3.5	bar(g)	at	179	°C
Vacuum:	FV	bar(g)	at	151	°C
Min. Metal Temp:	9	°C	at	MAWP	bar(g)
Liquid Level:	Note1				mm
Specific Gravity of Liquid:	0.751		at		°C

OPERATING CONDITIONS

Pressure:	Note 2	bar(g)	at	Note 2	°C
Vacuum:	-	bar(g)	at	-	°C
Low Temperature:	-	°C	at	-	°C
Hydrogen Partial Press.	-	bar(a)	at	-	°C

INTERNALS & INSULATION

DESCRIPTION	Bulk Density kg/m³	Liquid Holdup vol%	Pressure Drop bar
Packing:			
Catalyst:			
Mist Eliminator:			
Insulation	40/50 mm Hot ■	Cold ☐	
Fire Proofing	76 mm Yes ■	No ☐	

CONSTRUCTION

	Materials	Corrosion Allowance
Shell:	SA-516-60	3 mm
Heads	SA-516-60	3 mm
Support		mm

SPECIAL CONDITIONS

Stress Relieve (Process Reason Only):	Yes ☐	No ☐
Vessel in Wet Sour Service:	Yes ☐	No ☐
Steamout Required:	Yes ■	No ☐

	(kg)
EMPTY	
OPERATING	
FULL OF WATER	

	(mm)
TOP HEAD	
SHELL / TRANSITION	
BTM HEAD	
SKIRT	

ابن رشد ibn rushd	**COLUMN DATASHEET**	Contract: 10E0541A01 Equip. No.: 58-C-01 Revision: 1 Date: 31-Mar.-2011 Unit: 58 - BT Fractionation PO No.: Document No.: DS-58-CA-501 Sheet: 2 of 2

سابك sabic

CTCI CORPORATION

REV

NOZZLE SCHEDULE

Tag	Qty.	Size in	Pressure Rating	Description
AI	1	8	150# RFWN	REFLUX
AM	1	24	150# RFWN	MANWAY W/ B.F
AO	1	28	150# RFWN	VAPOR OUT
AV	1	3	150# RFFN	VENT
BU1-2	2	1 ID	150# RFLWN	TDRC-TI
CO	1	6	150# RFWN	PRODUCT
DU 1-2	2	1 ID	150# RFLWN	TDRC-TI
EM	1	24	300# RFWN	MANWAY W/ B.F & DAVIT
EU 1-2	2	1 ID	150# RFLWN	TDRC-TI
FU 1-2	2	1 ID	150# RFLWN	TDRC-TI
GU 1-2	2	1 ID	150# RFLWN	TDRC-TI
HI	1	8	150# RFWN	FEED
HM	1	24	150# RFWN	MANWAY W/ B.F & DAVIT
IM	1	24	150# RFWN	MANWAY W/ B.F & DAVIT
IU 1-2	2	1 ID	150# RFLWN	TDRC-TI
JI 1-2	2	30	150# RFWN	REBOILER IN
JL 1-2	2	2	150# RFWN	LEVEL
JM	1	24	150# RFWN	MANWAY W/ B.F & DAVIT
JS	1	3	150# RFWN	STEAMOUT (Note 9)
KO	1	24	150# RFWN	BTMS OUT W/ VORTEX BREAKER

NOTES:

1. Normal liquid level (NLL) is 970 mm above bottom tangent line. HLL: 1214 mm, LLL: 727 mm.
2. Operating Pressure/Temperature=Top: 0.41 bar(g)/91°C; Bottom: 1.03 bar(g)/156°C.
3. Total pressure drop through column internals = 0.496 bar.
4. Vendor shall follow UOP standard 3-115, 3-122, 3-180, 3-148, 3-180, 3-204.
5. Ladder & Platform Clips: as required.
6. Insulation Clips & Rings: Yes.
7. Vessel Support: Yes.
8. Vessel Heads=Top: 2:1 Elliptical; Bottom: 2:1 Elliptical.
9. Steamout at 150 (232 max.) °C and 3.5 (4.1 max.) bar (g).
10. Existing column, blank 35% of holes in top section and middle section and 50% holes in the bottom section trays, Skirt 7300 mm.

ICS -					
	APRD				
	CHKD				
	MADE				
(1/1)	DATE	Nov 26 '76	Jan. 1977		

U.S.A.

ITEM NO 58-C-01 ~~C-5801~~

PROJECT SPECIFICATION 560696 - 301 - 1 SHEET 3							
REV	DATE	BY	APP'D	REV	DATE	BY	APP'D
0	4/4/75						
1	4/21/75	J.Wie	N R				

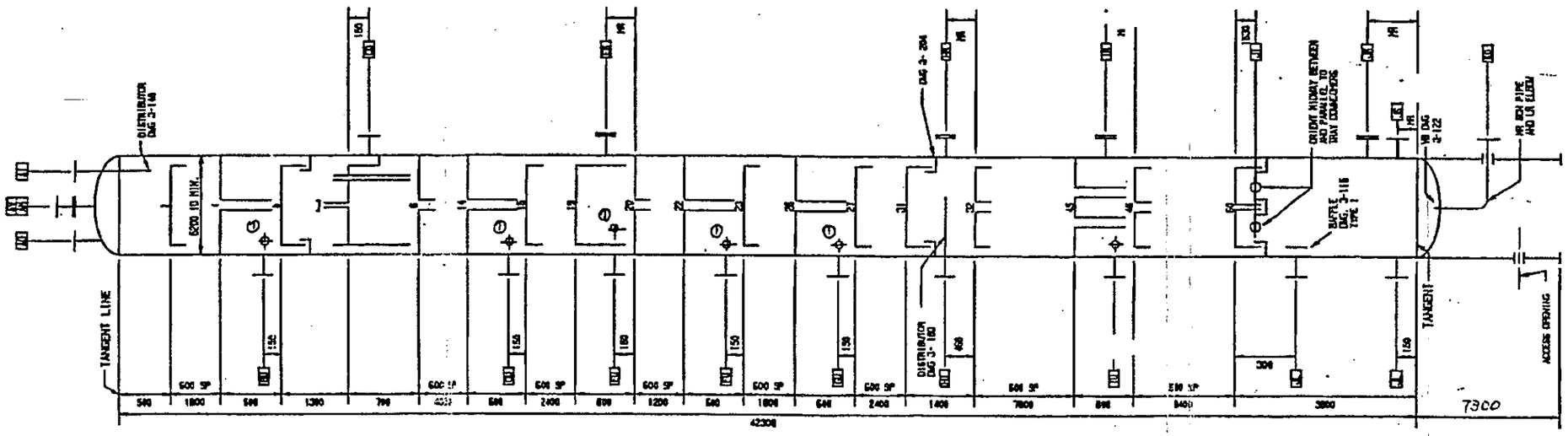

Drawings Referred to in this Specification

3-115-2	3-122-0	3-148-2	3-180-1	3-204-2				

593

509136

sabic

ARABIAN INDUSTRIAL FIBERS COMPANY

IR-II AROMATICS PROJECT

PROJECT NO. 10E0541A01

DOCUMENT TITLE:

CLAY TREATERS

DOCUMENT NO:

DS-58-DA-504

REV	DESCRIPTION	BY	CHK.	APPR.	DATE
3	Revised as Marked	WCC	CMW.	YSL	14-Nov-11
2	Revised as Marked	WCC	CMW	YSL	11-Aug-11
1	Issued for Design	WCC	CMW	YSL	26-Apr-11
0	Issue For Approval	WCC	CMW	YSL	9-Mar-11

ibn rushd

ARABIAN INDUSTRIAL FIBERS COMPANY YANBU, KINGDOM OF SAUDI ARABIA

CTCI CORPORATION

CERTIFIED

PROJ.

MGR _____ DATE _____

CLIENT _____ DATE _____

PAGE 1 OF 2

XC32B-58-504

GN-502 84.10

CONTENTS

ابن رشد
ibn rushd
FLUOR

VERTICAL VESSEL DATASHEET

Contract:	10E0541A01
Equip. No.:	58-D-04 A/B
Revision:	3 Date: 14-Nov.-2011
Unit:	58 - Benzene Toulene Fract
PO No.:	
Document No.	DS-58-DA-504
Sheet:	1 of 2

سابك
sabic
CTCI CORPORATION

REV

Client:	Arabian Industrial Fibers Company (Ibn Rushd)	Plant:	Benzene Toulene Fract
Service:	Clay Treaters	Site:	Yanbu, Kingdom of Saudi Arabia

DESIGN SKETCH

VESSEL DIMENSIONS: ID: 2400 mm T/T: 10100 mm

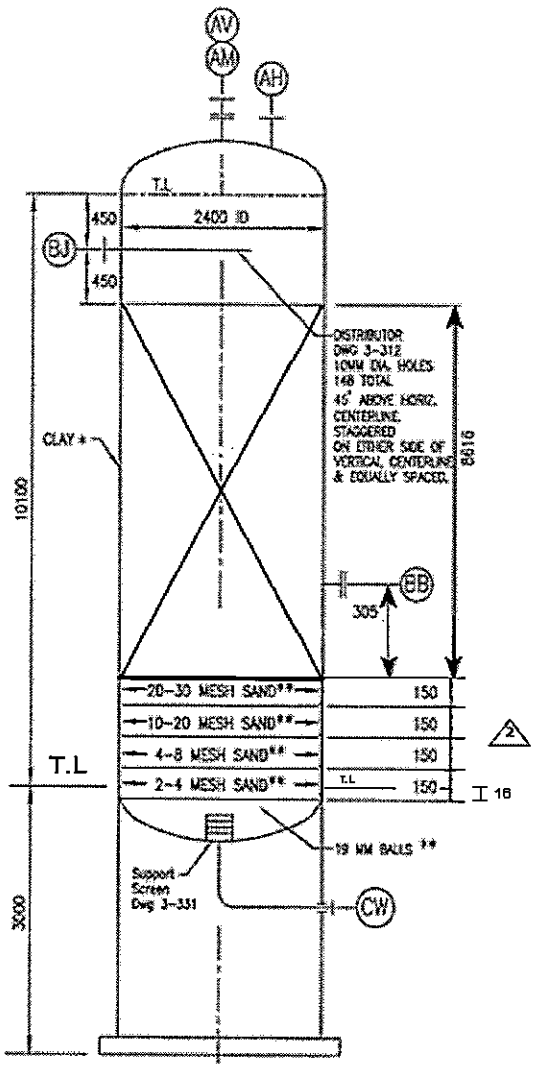

* BED MATERIAL, SEE PROJECT SPEC 106.

** INERT CERAMIC BALLS
TYPE 1, SEE STD SPEC 3-37
SAND, SEE STD SPEC 3-38

DESIGN CONDITIONS

Pressure:	30.0	bar(g)	at	230	°C	
Vacuum:	FV	bar(g)	at	199	°C	
Low Temperature:	6	°C	at	MAWP	bar(g)	0
Liquid Level:	Note 4				mm	
Specific Gravity of Liquid:	0.731		at	199	°C	

OPERATING CONDITIONS

Pressure: Top	16.7	bar(g)	at	199	°C	0
Bottom		bar(g)	at	193	°C	
Vacuum:		bar(g)	at		°C	
Low Temperature:		°C	at		°C	
Hydrogen Partial Press.		bar(g)	at		°C	

INTERNALS & INSULATION

DESCRIPTION	Bulk Density kg/m³	Liquid Holdup vol%	Pressure Drop bar
Packing:			
Catalyst:			
Mist Eliminator:			
Insulation	50 mm Hot ■	Cold ☐	
Fire Proofing	Yes ☐	No ☐	

CONSTRUCTION

	Materials	Corrosion Allowance		REV
Shell:	SA-516-70N(K.C.S)	3	mm	3
Heads	SA-516-70N(K.C.S)	3	mm	3
Lining/Cladding:			mm	

SPECIAL CONDITIONS

Stress Relieve (Process Reason Only):	Yes ☐	No ■
Vessel in Wet Sour Service:	Yes ☐	No ■
Steamout Required:	Yes ☐	No ■

See Notes on Page 2

THE ESTIMATED MECHANICAL WEIGHTS	(kg)	REV
FABRICATED	30900	
EMPTY	42900	
OPERATING	154000	
FULL OF WATER	89600	
THE ESTIMATED WALL THICKNESS	**(mm)**	2
TOP HEAD	30	
SHELL	31	
BTM HEAD	31	
SKIRT	12	

ابن رشد
ibn rushd
FLUOR

VERTICAL VESSEL DATASHEET

Contract:	10E0541A01
Equip. No.:	58-D-04 A/B
Revision:	3 Date: 14-Nov.-2011
Unit:	58 - Benzene Toulene Fract
PO No.:	
Document No.	DS-58-DA-504
Sheet:	2 of 2

سابك
sabic
CTCI CORPORATION

REV

NOZZLE SCHEDULE

Tag	Qty.	Size in	Pressure Rating	Description	REV
AH	1	4	300# RFWN	Relief	3
AM	1	24	300# RFWN	Manway w/ davit	
AV	1	2	300# RFLWN	Vent	
BB	1	24	300# RFWN	Manway w/ davit	
BJ	1	4	300# RFWN	Inlet	
CW	1	4	300# RFWN	Outlet	

NOTES:

1. Two vessels required, mk. no. 58-D-04A & 58-D-04B and are designed to ASME Section VIII, Div. 1. — 0
2. Estimated thickness listed in sheet 1 are estimate based on the ASME code requirements and are meant to be used for quotation purposes only. — 2
3. Vessel heads are 2:1 Elliptical.
4. Vessel shall have Normal Liquid Level (NLL) of full capacity.
5. Schematic elevations of bed support materials may not be representative of actual dimensions. The layer/s of bed support material may be below the bottom tangent line for large diameter vessels.
6. Paint coating shall be in accordance with SES-PCS-15 (Insulated part) and SES-PCS-4 (Non-insulated protruding part).
7. Applicable specifications: SP-000-AA-5002, 22854-SP-000-A-003, 22854-SP-000-A-004, 22854-SP-000-D-001, 22854-SP-000-W-001, 22854-SP-000-W-002, 22854-SP-000-W-003, P01-E07, T01-S01, 3-11.
8. Insulation support rings are required.
9. Following UOP specifications / standards apply: 3-11, 3-37, 3-38, 3-312 and 3-331.
10. ASME Code stamp is required.
11. New, Skirt 3000 mm.Catalyst-Initial inventory is adequate for the initial fill of the two clay treaters plus an additional equal amount to be kept available for spent clay replacement. It is intended that the initial inventory of catalyst/chemical be filled/replaced prior to startup. — 0
12. The clay quantity is 39 m^3/ Treater. — 2

سابك
sabic

ARABIAN INDUSTRIAL FIBERS COMPANY

IR-II AROMATICS PROJECT

PROJECT NO. 10E0541A01

DOCUMENT TITLE:

REFORMATE SPLITTER REBOILER DATA SHEET

DOCUMENT NO:

DS-56-BA-501

REV	DESCRIPTION	BY	CHK.	APPR.	DATE
2	Revised As Marked	CAG	SYL	YSC	11-Aug-11
1	Issued For Design	CAG	SYL	YSL	27-May-11
0	Issue For Approval	CAG	SYL	YSL	23-Mar-11

ابن رشد ibn rushd

ARABIAN INDUSTRIAL FIBERS COMPANY YANBU, KINGDOM OF SAUDI ARABIA

CTCI CORPORATION

CERTIFIED

PROJ.

MGR DATE

CLIENT DATE

PAGE 1 OF 2

XC33D-56-501

GN-502 84.10

55401

CONTENTS

Attachment total 13 pages.

ابن رشد
ibn rushd
FLUOR

FIRED HEATER DATA SHEET

Contract:	10E0541A01
Equipment No.:	56-B-01
Revision:	2 Date: 11-Aug.-2011
Unit: 56 - Sulfolane	
P.O. No.:	
Document No.:	DS-56-BA-501
Sheet:	1 of 5

سابك
sabic
CTCI CORPORATION

REV

1	Client:	Arabian Industrial Fibers Company (Ibn Rushd)		Vendor:	Existing Born Heater - Revamped for New Service		
2	Service:	Reformate Splitter Reboiler		Plant:	Sulfolane	Site:	Yanbu, Saudi Arabia
3	Type of Heater:	Vertical Cylindrical		Vendor:	Existing Born Heater		
4	Total Heater Absorbed Duty:	18.04	MW	Assembly:			

5	**PROCESS DESIGN CONDITIONS**						
6	* OPERATION CASE		REVAMP				
7	HEATER SECTION		Radiant/Convec				
8	SERVICE		See Line 2				
9	HEAT ABSORPTION	MW	18.04				
10	FLUID NAME		Hydrocarbon				
11	FLOW RATE	kg/hr	1,133,981				
12	FLOW RATE	B.P.D.					
13	PRESSURE DROP - ALLOWABLE (CLEAN / FOULED)	bar	1.9				
14	PRESSURE DROP - CALCULATED (CLEAN / FOULED)	bar					
15	FOULING ALLOWANCE	m²·°C/W					
16	THERMAL CONDUCTIVITY OF COKE/SCALE	W/m·°C					
17	COKING ALLOWANCE	mm					
18	AVG. RADIANT SECTION FLUX DENSITY - ALLOWABLE	W/m²					
19	AVG. RADIANT SECTION FLUX DENSITY - CALCULATED	W/m²					
20	MAX. RADIANT SECTION FLUX DENSITY	W/m²					
21	CONVECTION SECTION FLUX DENSITY, (BARE TUBE)	W/m²					
22	VELOCITY LIMITATION	m/s					
23	PROCESS FLUID MASS VELOCITY	kg/s·m²					
24	MAX. ALLOWABLE / CALCULATED INSIDE FILM TEMPERATURE	°C					
25	**INLET CONDITIONS:**						
26	TEMPERATURE	°C	204				
27	PRESSURE ■ bar (g) ☐	bar (g)	4.67				
28	LIQUID FLOW	kg/hr	1,133,981				
29	VAPOR FLOW	kg/hr	0				
30	DENSITY - LIQUID	kg/m³	697.9				
31	VAPOR MOLECULAR WEIGHT						
32	VISCOSITY - (LIQUID / VAPOR)	mPa-s	0.217				
33	SPECIFIC HEAT - (LIQUID / VAPOR)	kJ/kg·°C	2.451				
34	THERMAL CONDUCTIVITY - (LIQUID / VAPOR)	W/m·°C	0.102				
35	**OUTLET CONDITIONS:**						
36	TEMPERATURE	°C	215				
37	PRESSURE ■ bar (g) ☐	bar (g)	2.77				
38	LIQUID FLOW	kg/hr	1,015,480				
39	VAPOR FLOW	kg/hr	118,501				
40	DENSITY - LIQUID	kg/m³	684.8				
41	VAPOR MOLECULAR WEIGHT		114.2				0
42	VISCOSITY - (LIQUID / VAPOR)	mPa-s	0.207	0.010			
43	SPECIFIC HEAT - (LIQUID / VAPOR)	kJ/kg·°C	2.498	1.985			
44	THERMAL CONDUCTIVITY - (LIQUID / VAPOR)	W/m·°C	0.101	0.025			
45	**REMARKS AND SPECIAL REQUIREMENTS:**						
46	DISTILLATION DATA OR FEED COMPOSITION:		See Fluid Properties on Sheets 3 and 4				
47	SHORT TERM OPERATING CONDITIONS:						
48	OTHER:						
49	**NOTES:**						
50	See Notes on Sheet 5						
51							
52							
53							
54							
55							
56							
57							
58							
59							
60							
61							
62							

55401

ابن رشد
ibn rushd
FLUOR

FIRED HEATER DATA SHEET

Contract:	10E0541A01
Equipment No.:	56-B-01
Revision:	2 Date: 11-Aug.-2011
Unit:	56 - Sulfolane
P.O. No.:	
Document No.:	DS-56-BA-501
Sheet:	2 of 5

سابك
sabic
CTCI CORPORATION

COMBUSTION DESIGN CONDITIONS

				REV
* OPERATING CASE			REVAMP	
* TYPE OF FUEL			Sales Gas	
* EXCESS AIR		%	50.0	
CALCULATED HEAT RELEASE (LHV)		MW	21.21	
CALCULATED THERMAL EFFICIENCY		% (LHV)		
CALCULATED FUEL EFFICIENCY		% (LHV)	85.0	
* GUARANTEED FUEL EFFICIENCY		% (LHV)		
RADIATION LOSS		% OF HEAT RELEASE (LHV)	2.0	
FLUE GAS TEMPERTURE LEAVING:	RADIANT SECT.	°C	555	
	CONVECTION SECTION	°C	230	
	AIR PREHEATER	°C	n/a	
FLUE GAS QUANTITY		kg/hr	41,546	
FLUE GAS MASS VELOCITY THRU CONVECTION SECTION		kg/s·m²		
VOLUMETRIC HEAT RELEASE (LHV)		kW/m³		
DRAFT: IMMEDIATELY ABOVE TOP CONVECTION ROW,		mm H2O	2.9	1
IMMEDIATELY BELOW BOTTOM CONVECTION ROW,		mm H2O	2.5	1
AT BURNERS,		mm H2O	14.8	
AMBIENT AIR TEMPERATURE - EFFICIENCY CALCULATION		°C	15.6	
* AMBIENT AIR TEMPERATURE - STACK DESIGN		°C	50.0	
COMBUSTION AIR QUANTITY		kg/hr	39,665	
* ALTITUDE ABOVE SEA LEVEL		m	7.25	

FUEL CHARACTERISTICS

* GAS TYPE	Sales Gas		* GAS TYPE			* LIQUID TYPE	
* LHV	40,512	■ kJ/kg ☐ kJ/Sm³	* LHV		☐ kJ/kg ☐ kJ/Sm³	* LHV	kJ/kg
* HHV		☐ kJ/kg ☐ kJ/Sm³	* HHV		☐ kJ/kg ☐ kJ/Sm³	* HHV	kJ/kg
* PRESS. @ BURNER	1.75	bar (g)	* PRESS. @ BURNER		bar (g)	* PRESS. @ BURNER	bar (g)
* TEMP. @ BURNER	15.6	°C	* TEMP. @ BURNER		°C	* TEMP. @ BURNER	°C
* MOLECULAR WEIGHT			* MOLECULAR WEIGHT			* VISCOSITY @ °C	SSU
						* ATOMIZING STEAM TEMP.	°C
						* ATOMIZING STEAM PRESS.	bar (g)

COMPOSITION	MOLE %
N2	12.0
C1	82.7
C2	5.0
C3	0.3
H2S	<2.0 wt ppm
TOTAL	100.0

COMPOSITION	MOLE %

COMPOSITION	WT %
* VANADIUM (ppm)	
* SODIUM (ppm)	
* SULFUR	
* ASH	

DATA FOR EXISTING BURNERS

MANUFACTURER: John Zink SIZE / MODEL: PSFG-16 NUMBER: 12 (0)
TYPE: Forced Draft, Low Nox, Staged Fuel LOCATION: RADIANT FLOOR ORIENTATION: FIRING UP (0)
HEAT RELEASE PER BURNER: MW DESIGN: 4.950 NORMAL: 1.77 MINIMUM: 1.65
PRESSURE DROP ACROSS BURNER @ DESIGN HEAT RELEASE: By Vendor mm H2O
DISTANCE BURNER CENTER LINE TO TUBE CENTER LINE: HORIZONTAL: 2,626 mm VERTICAL: mm
DISTANCE BURNER CENTER LINE TO UNSHIELDED REFRACTORY: HORIZONTAL: mm VERTICAL: 17,907 mm
BURNER PILOT: CAPACITY 20 kW FUEL Sales Gas FUEL PRESSURE bar (g)
IGNITION METHOD: Automatic
SPECIAL REQUIREMENTS (FLAME DETECTION DEVICES, SAFETY INTERLOCKS, ETC.): UV SCANNERS

REQUIRED EMISSIONS: ☐ ppmv(d) (CORRECTED TO 3% O_2) NOx: Remark 1 CO: Remark 1 SOx: Remark 1
See REMARK NO. 1 ☐ kg/kJ ☐ (LHV) ☐ (HHV) UHC: Remark 1 PARTICULATES: Remark 1

REMARKS:

1. The Royal Commission for Jubail and Yanbu has issued the "Royal Commission Environmental Regulations (RCER)" to be adopted by industries both in Jubail and Yanbu. Any facility operating or planning to operate on the Royal Commission property shall comply with those regulations.

55401

ابن رشد
ibn rushd
FLUOR

FIRED HEATER DATA SHEET

Contract:	10E0541A01
Equipment No.:	56-B-01
Revision:	2 Date: 11-Aug.-2011
Unit: 56 - Sulfolane	
P.O. No.:	
Document No.:	DS-56-BA-501
Sheet:	3 of 5

سابك
sabic
CTCI CORPORATION

FLUID PROPERTIES: REV

PROCESS

Thermodynamic condition			Vapor					Liquid					
Pressure bar(a)	Temp °C	Weight fraction vapor	Enthalpy kJ/kg	Density kg/m³	Specific heat kJ/kg-°C	Viscosity cP	Thermal cond. W/m-°C	Enthalpy kJ/kg	Density kg/m³	Specific heat kJ/kg-°C	Viscosity cP	Thermal cond. W/m-°C	Surface tension dyne/cm
3.771	203.89	0.0000	0.00	0.00	0.0000	0.0000	0.0000	385.99	696.64	2.4505	0.2167	0.1023	11.58
3.771	207.27	0.0000	0.00	0.00	0.0000	0.0000	0.0000	394.29	692.96	2.4652	0.2133	0.1016	11.28
3.771	210.64	0.0000	0.00	0.00	0.0000	0.0000	0.0000	402.64	689.11	2.4794	0.2101	0.1014	10.98
3.771	214.01	0.0000	700.35	11.70	1.9816	0.0100	0.0249	411.01	685.43	2.4941	0.2069	0.1009	10.68
3.771	214.08	0.0105	700.48	11.70	1.9820	0.0100	0.0249	411.17	685.27	2.4945	0.2069	0.1009	10.68
3.771	214.15	0.0209	700.60	11.70	1.9825	0.0100	0.0249	411.34	685.27	2.4949	0.2069	0.1009	10.67
3.771	214.22	0.0314	700.72	11.70	1.9825	0.0100	0.0249	411.50	685.27	2.4949	0.2069	0.1009	10.67
3.771	214.29	0.0419	700.84	11.71	1.9829	0.0100	0.0249	411.67	685.27	2.4953	0.2069	0.1009	10.67
3.771	214.36	0.0524	700.96	11.71	1.9833	0.0100	0.0249	411.83	685.27	2.4953	0.2069	0.1007	10.67
3.771	214.43	0.0629	701.09	11.71	1.9833	0.0100	0.0249	412.00	685.11	2.4958	0.2069	0.1007	10.67
3.771	214.50	0.0734	701.21	11.71	1.9837	0.0100	0.0249	412.17	685.11	2.4962	0.2070	0.1007	10.66
3.771	214.57	0.0839	701.34	11.71	1.9841	0.0100	0.0249	412.33	685.11	2.4962	0.2070	0.1007	10.66
3.771	214.64	0.0944	701.46	11.71	1.9845	0.0100	0.0249	412.50	685.11	2.4966	0.2070	0.1007	10.66
3.771	214.72	0.1049	701.58	11.72	1.9845	0.0100	0.0249	412.67	684.95	2.4966	0.2070	0.1007	10.66
4.170	203.89	0.0000	0.00	0.00	0.0000	0.0000	0.0000	385.99	696.64	2.4505	0.2168	0.1023	11.58
4.170	209.05	0.0000	0.00	0.00	0.0000	0.0000	0.0000	398.70	691.04	2.4727	0.2116	0.1016	11.12
4.170	214.21	0.0000	0.00	0.00	0.0000	0.0000	0.0000	411.52	685.27	2.4949	0.2067	0.1009	10.66
4.170	219.37	0.0000	709.74	12.91	2.0034	0.0100	0.0254	424.43	679.50	2.5175	0.2020	0.1000	10.21
4.170	219.43	0.0105	709.87	12.91	2.0038	0.0100	0.0254	424.60	679.34	2.5179	0.2020	0.1000	10.21
4.170	219.50	0.0209	709.99	12.91	2.0038	0.0100	0.0254	424.76	679.34	2.5184	0.2020	0.1000	10.20
4.170	219.57	0.0314	710.11	12.91	2.0042	0.0100	0.0254	424.92	679.34	2.5184	0.2021	0.1000	10.20
4.170	219.64	0.0419	710.23	12.91	2.0046	0.0100	0.0254	425.09	679.34	2.5188	0.2021	0.1000	10.20
4.170	219.71	0.0524	710.35	12.92	2.0051	0.0100	0.0254	425.25	679.34	2.5188	0.2021	0.1000	10.20
4.170	219.78	0.0629	710.48	12.92	2.0051	0.0100	0.0254	425.42	679.18	2.5192	0.2021	0.1000	10.20
4.170	219.85	0.0734	710.60	12.92	2.0055	0.0100	0.0254	425.58	679.18	2.5196	0.2021	0.1000	10.19
4.170	219.92	0.0839	710.73	12.92	2.0059	0.0100	0.0254	425.75	679.18	2.5196	0.2021	0.1000	10.19
4.170	219.99	0.0945	710.85	12.92	2.0059	0.0100	0.0254	425.92	679.18	2.5200	0.2021	0.1000	10.19
4.170	220.06	0.1050	710.98	12.92	2.0063	0.0100	0.0254	426.08	679.02	2.5200	0.2021	0.1000	10.19
4.568	203.89	0.0000	0.00	0.00	0.0000	0.0000	0.0000	385.99	696.80	2.4505	0.2168	0.1023	11.58
4.568	210.71	0.0000	0.00	0.00	0.0000	0.0000	0.0000	402.81	689.43	2.4798	0.2101	0.1012	10.97
4.568	217.53	0.0000	0.00	0.00	0.0000	0.0000	0.0000	419.83	681.75	2.5096	0.2037	0.1004	10.37
4.568	224.34	0.0000	718.50	14.12	2.0239	0.0101	0.0258	437.02	673.90	2.5397	0.1977	0.0993	9.78
4.568	224.41	0.0105	718.62	14.12	2.0239	0.0101	0.0258	437.19	673.74	2.5401	0.1977	0.0993	9.77
4.568	224.48	0.0210	718.74	14.12	2.0243	0.0101	0.0258	437.35	673.74	2.5401	0.1977	0.0993	9.77
4.568	224.54	0.0315	718.87	14.12	2.0247	0.0101	0.0258	437.51	673.74	2.5406	0.1977	0.0993	9.77
4.568	224.62	0.0419	718.99	14.13	2.0247	0.0101	0.0258	437.67	673.74	2.5410	0.1977	0.0993	9.77
4.568	224.68	0.0525	719.11	14.13	2.0252	0.0101	0.0258	437.84	673.58	2.5410	0.1977	0.0993	9.76
4.568	224.75	0.0630	719.23	14.13	2.0256	0.0101	0.0258	438.00	673.58	2.5414	0.1977	0.0993	9.76
4.568	224.82	0.0735	719.36	14.13	2.0260	0.0101	0.0258	438.17	673.58	2.5418	0.1978	0.0993	9.76
4.568	224.89	0.0840	719.48	14.13	2.0260	0.0101	0.0258	438.33	673.58	2.5418	0.1978	0.0993	9.76
4.568	224.96	0.0945	719.61	14.13	2.0264	0.0101	0.0258	438.50	673.58	2.5422	0.1978	0.0993	9.76
4.568	225.03	0.1050	719.73	14.14	2.0268	0.0101	0.0258	438.67	673.42	2.5422	0.1978	0.0993	9.75
4.967	203.89	0.0000	0.00	0.00	0.0000	0.0000	0.0000	385.99	696.96	2.4505	0.2168	0.1023	11.58
4.967	212.26	0.0000	0.00	0.00	0.0000	0.0000	0.0000	406.66	687.83	2.4865	0.2087	0.1011	10.83
4.967	220.63	0.0000	0.00	0.00	0.0000	0.0000	0.0000	427.63	678.38	2.5234	0.2010	0.0999	10.10
4.967	229.00	0.0000	726.72	15.33	2.0432	0.0102	0.0261	448.90	668.45	2.5611	0.1938	0.0987	9.37
4.967	229.07	0.0105	726.84	15.33	2.0432	0.0102	0.0261	449.06	668.45	2.5611	0.1938	0.0987	9.37
4.967	229.13	0.0210	726.96	15.34	2.0436	0.0102	0.0261	449.23	668.45	2.5615	0.1938	0.0987	9.37
4.967	229.20	0.0315	727.08	15.34	2.0440	0.0102	0.0261	449.39	668.45	2.5619	0.1938	0.0987	9.37
4.967	229.27	0.0420	727.21	15.34	2.0440	0.0102	0.0261	449.55	668.29	2.5619	0.1938	0.0987	9.37
4.967	229.33	0.0525	727.33	15.34	2.0444	0.0102	0.0261	449.71	668.29	2.5623	0.1938	0.0987	9.36
4.967	229.41	0.0630	727.45	15.35	2.0448	0.0102	0.0261	449.88	668.29	2.5623	0.1938	0.0987	9.36
4.967	229.47	0.0735	727.58	15.35	2.0448	0.0102	0.0261	450.04	668.29	2.5627	0.1938	0.0987	9.36
4.967	229.54	0.0840	727.70	15.35	2.0453	0.0102	0.0261	450.21	668.13	2.5632	0.1938	0.0987	9.36
4.967	229.61	0.0946	727.82	15.35	2.0457	0.0102	0.0261	450.37	668.13	2.5632	0.1938	0.0987	9.35
4.967	229.68	0.1051	727.95	15.35	2.0461	0.0102	0.0261	450.54	668.13	2.5636	0.1939	0.0987	9.35
5.365	203.89	0.0000	0.00	0.00	0.0000	0.0000	0.0000	385.99	697.12	2.4505	0.2169	0.1023	11.58
5.365	213.72	0.0000	0.00	0.00	0.0000	0.0000	0.0000	410.30	686.39	2.4928	0.2073	0.1009	10.70
5.365	223.56	0.0000	0.00	0.00	0.0000	0.0000	0.0000	435.03	675.18	2.5364	0.1985	0.0995	9.84
5.365	233.38	0.0000	734.47	16.55	2.0612	0.0103	0.0265	460.17	663.32	2.5812	0.1902	0.0981	9.00
5.365	233.44	0.0105	734.59	16.56	2.0616	0.0103	0.0265	460.33	663.32	2.5816	0.1902	0.0981	9.00
5.365	233.51	0.0210	734.71	16.56	2.0620	0.0103	0.0265	460.49	663.32	2.5816	0.1902	0.0981	8.99
5.365	233.58	0.0315	734.83	16.56	2.0620	0.0103	0.0265	460.65	663.32	2.5820	0.1902	0.0981	8.99
5.365	233.64	0.0420	734.95	16.56	2.0624	0.0103	0.0265	460.81	663.16	2.5820	0.1902	0.0981	8.99
5.365	233.71	0.0525	735.07	16.56	2.0628	0.0103	0.0265	460.97	663.16	2.5824	0.1902	0.0981	8.99
5.365	233.78	0.0630	735.20	16.57	2.0628	0.0103	0.0265	461.14	663.16	2.5828	0.1902	0.0981	8.99
5.365	233.85	0.0736	735.32	16.57	2.0633	0.0103	0.0265	461.30	663.16	2.5828	0.1902	0.0980	8.98
5.365	233.92	0.0841	735.44	16.57	2.0637	0.0103	0.0265	461.46	663.16	2.5833	0.1903	0.0980	8.98
5.365	233.98	0.0946	735.57	16.57	2.0641	0.0103	0.0265	461.63	663.00	2.5837	0.1903	0.0980	8.98
5.365	234.05	0.1052	735.69	16.58	2.0641	0.0103	0.0267	461.79	663.00	2.5837	0.1903	0.0980	8.98

55401

ابن رشد
ibn rushd
FLUOR®

FIRED HEATER DATA SHEET

Contract:	10E0541A01
Equipment No.:	56-B-01
Revision:	2 Date: 11-Aug.-2011
Unit: 56 - Sulfolane	
P.O. No.:	
Document No.:	DS-56-BA-501
Sheet:	4 of 5

سابك
sabic
CTCI CORPORATION

FLUID PROPERTIES:

REV

PROCESS

Thermodynamic condition			Vapor					Liquid					
Pressure bar(a)	Temp °C	Weight fraction vapor	Enthalpy kJ/kg	Density kg/m³	Specific heat kJ/kg-°C	Viscosity cP	Thermal cond. W/m-°C	Enthalpy kJ/kg	Density kg/m³	Specific heat kJ/kg-°C	Viscosity cP	Thermal cond. W/m-°C	Surface tension dyne/cm
5.764	203.89	0.0000	0.00	0.00	0.0000	0.0000	0.0000	385.99	697.28	2.4505	0.2169	0.1023	11.58
5.764	215.10	0.0000	0.00	0.00	0.0000	0.0000	0.0000	413.74	684.95	2.4991	0.2061	0.1007	10.58
5.764	226.31	0.0000	0.00	0.00	0.0000	0.0000	0.0000	442.03	672.13	2.5485	0.1962	0.0992	9.61
5.764	237.52	0.0000	741.80	17.78	2.0787	0.0103	0.0268	470.89	658.52	2.6004	0.1869	0.0974	8.65
5.764	237.58	0.0105	741.92	17.78	2.0792	0.0103	0.0268	471.05	658.36	2.6008	0.1869	0.0974	8.64
5.764	237.65	0.0210	742.04	17.79	2.0796	0.0103	0.0268	471.21	658.36	2.6013	0.1869	0.0974	8.64
5.764	237.72	0.0315	742.16	17.79	2.0796	0.0103	0.0268	471.37	658.36	2.6013	0.1869	0.0974	8.64
5.764	237.78	0.0420	742.28	17.79	2.0800	0.0103	0.0268	471.53	658.36	2.6017	0.1869	0.0974	8.64
5.764	237.85	0.0525	742.41	17.79	2.0804	0.0103	0.0268	471.69	658.36	2.6021	0.1869	0.0974	8.64
5.764	237.92	0.0631	742.53	17.80	2.0804	0.0103	0.0268	471.86	658.20	2.6021	0.1869	0.0974	8.63
5.764	237.98	0.0736	742.65	17.80	2.0808	0.0103	0.0268	472.02	658.20	2.6025	0.1870	0.0974	8.63
5.764	238.05	0.0841	742.78	17.80	2.0813	0.0103	0.0268	472.19	658.20	2.6025	0.1870	0.0974	8.63
5.764	238.12	0.0947	742.90	17.80	2.0813	0.0103	0.0268	472.35	658.20	2.6029	0.1870	0.0974	8.63
5.764	238.18	0.1052	743.02	17.81	2.0817	0.0103	0.0270	472.51	658.04	2.6034	0.1870	0.0974	8.63
6.163	203.89	0.0000	0.00	0.00	0.0000	0.0000	0.0000	385.99	697.44	2.4505	0.2170	0.1023	11.58
6.163	216.41	0.0000	0.00	0.00	0.0000	0.0000	0.0000	417.02	683.67	2.5045	0.2050	0.1006	10.47
6.163	228.93	0.0000	0.00	0.00	0.0000	0.0000	0.0000	448.73	669.09	2.5606	0.1940	0.0987	9.38
6.163	241.44	0.0000	748.77	19.02	2.0955	0.0104	0.0272	481.14	653.71	2.6197	0.1839	0.0969	8.31
6.163	241.51	0.0105	748.89	19.02	2.0959	0.0104	0.0272	481.30	653.71	2.6197	0.1839	0.0969	8.31
6.163	241.57	0.0210	749.01	19.02	2.0963	0.0104	0.0272	481.46	653.71	2.6201	0.1839	0.0969	8.31
6.163	241.64	0.0315	749.13	19.02	2.0963	0.0104	0.0272	481.62	653.55	2.6201	0.1839	0.0969	8.31
6.163	241.71	0.0420	749.25	19.03	2.0968	0.0104	0.0272	481.78	653.55	2.6205	0.1839	0.0969	8.31
6.163	241.77	0.0526	749.37	19.03	2.0972	0.0104	0.0272	481.94	653.55	2.6209	0.1839	0.0969	8.31
6.163	241.83	0.0631	749.49	19.03	2.0972	0.0104	0.0272	482.10	653.55	2.6209	0.1839	0.0969	8.30
6.163	241.90	0.0736	749.62	19.03	2.0976	0.0104	0.0272	482.26	653.39	2.6214	0.1839	0.0969	8.30
6.163	241.97	0.0842	749.74	19.04	2.0980	0.0104	0.0272	482.43	653.39	2.6214	0.1839	0.0969	8.30
6.163	242.03	0.0947	749.86	19.04	2.0980	0.0104	0.0272	482.59	653.39	2.6218	0.1839	0.0969	8.30
6.163	242.10	0.1053	749.99	19.04	2.0984	0.0104	0.0272	482.75	653.39	2.6222	0.1839	0.0969	8.30
6.561	203.89	0.0000	0.00	0.00	0.0000	0.0000	0.0000	385.99	697.60	2.4505	0.2170	0.1023	11.58
6.561	217.66	0.0000	0.00	0.00	0.0000	0.0000	0.0000	420.14	682.39	2.5100	0.2039	0.1004	10.36
6.561	231.42	0.0000	0.00	0.00	0.0000	0.0000	0.0000	455.12	666.37	2.5720	0.1920	0.0983	9.17
6.561	245.18	0.0000	755.41	20.26	2.1118	0.0104	0.0275	490.97	649.07	2.6377	0.1810	0.0964	8.00
6.561	245.24	0.0105	755.52	20.26	2.1122	0.0104	0.0275	491.12	649.07	2.6381	0.1810	0.0964	8.00
6.561	245.31	0.0210	755.65	20.26	2.1122	0.0104	0.0275	491.28	649.07	2.6385	0.1810	0.0964	8.00
6.561	245.37	0.0315	755.77	20.27	2.1127	0.0104	0.0275	491.44	649.07	2.6385	0.1810	0.0964	8.00
6.561	245.44	0.0421	755.89	20.27	2.1131	0.0104	0.0275	491.60	649.07	2.6389	0.1811	0.0964	7.99
6.561	245.51	0.0526	756.01	20.27	2.1131	0.0104	0.0275	491.76	648.91	2.6389	0.1811	0.0964	7.99
6.561	245.57	0.0631	756.13	20.27	2.1135	0.0104	0.0275	491.92	648.91	2.6394	0.1811	0.0964	7.99
6.561	245.63	0.0737	756.25	20.28	2.1139	0.0104	0.0275	492.08	648.91	2.6398	0.1811	0.0964	7.99
6.561	245.70	0.0842	756.38	20.28	2.1139	0.0104	0.0275	492.24	648.91	2.6398	0.1811	0.0964	7.99
6.561	245.77	0.0948	756.50	20.28	2.1143	0.0104	0.0275	492.41	648.75	2.6402	0.1811	0.0964	7.98
6.561	245.83	0.1053	756.62	20.29	2.1143	0.0104	0.0275	492.57	648.75	2.6406	0.1811	0.0964	7.98
6.960	203.89	0.0000	0.00	0.00	0.0000	0.0000	0.0000	385.99	697.76	2.4505	0.2171	0.1023	11.58
6.960	218.84	0.0000	0.00	0.00	0.0000	0.0000	0.0000	423.13	681.27	2.5154	0.2028	0.1002	10.25
6.960	233.80	0.0000	0.00	0.00	0.0000	0.0000	0.0000	461.25	663.64	2.5833	0.1901	0.0981	8.96
6.960	248.75	0.0000	761.75	21.51	2.1277	0.0105	0.0279	500.41	644.74	2.6557	0.1784	0.0959	7.70
6.960	248.81	0.0105	761.87	21.51	2.1277	0.0105	0.0279	500.56	644.58	2.6561	0.1784	0.0959	7.70
6.960	248.87	0.0210	761.99	21.51	2.1282	0.0105	0.0279	500.72	644.58	2.6561	0.1784	0.0959	7.70
6.960	248.94	0.0316	762.11	21.52	2.1282	0.0105	0.0279	500.88	644.58	2.6565	0.1784	0.0959	7.70
6.960	249.00	0.0421	762.23	21.52	2.1286	0.0105	0.0279	501.04	644.58	2.6569	0.1784	0.0959	7.70
6.960	249.07	0.0526	762.35	21.52	2.1290	0.0105	0.0279	501.20	644.58	2.6569	0.1784	0.0959	7.70
6.960	249.13	0.0632	762.47	21.53	2.1290	0.0105	0.0279	501.36	644.42	2.6574	0.1784	0.0959	7.69
6.960	249.19	0.0737	762.59	21.53	2.1294	0.0105	0.0279	501.52	644.42	2.6574	0.1784	0.0959	7.69
6.960	249.26	0.0843	762.71	21.53	2.1298	0.0105	0.0279	501.68	644.42	2.6578	0.1784	0.0959	7.69
6.960	249.32	0.0948	762.84	21.54	2.1298	0.0105	0.0279	501.84	644.42	2.6582	0.1784	0.0959	7.69
6.960	249.39	0.1054	762.96	21.54	2.1302	0.0105	0.0279	502.00	644.26	2.6582	0.1784	0.0959	7.69
7.358	203.89	0.0000	0.00	0.00	0.0000	0.0000	0.0000	385.99	697.92	2.4505	0.2171	0.1023	11.58
7.358	219.98	0.0000	0.00	0.00	0.0000	0.0000	0.0000	425.99	680.14	2.5205	0.2019	0.1000	10.15
7.358	236.08	0.0000	0.00	0.00	0.0000	0.0000	0.0000	467.15	661.08	2.5937	0.1883	0.0978	8.77
7.358	252.16	0.0000	767.82	22.77	2.1428	0.0105	0.0280	509.51	640.42	2.6733	0.1759	0.0954	7.42
7.358	252.22	0.0105	767.94	22.77	2.1428	0.0105	0.0280	509.66	640.26	2.6733	0.1759	0.0954	7.42
7.358	252.29	0.0210	768.06	22.78	2.1432	0.0105	0.0280	509.82	640.26	2.6737	0.1759	0.0954	7.42
7.358	252.35	0.0316	768.18	22.78	2.1436	0.0105	0.0280	509.98	640.26	2.6741	0.1759	0.0954	7.42
7.358	252.41	0.0421	768.30	22.78	2.1436	0.0105	0.0282	510.13	640.26	2.6741	0.1759	0.0954	7.42
7.358	252.48	0.0526	768.42	22.78	2.1441	0.0105	0.0282	510.29	640.10	2.6745	0.1759	0.0954	7.41
7.358	252.54	0.0632	768.54	22.79	2.1445	0.0105	0.0282	510.45	640.10	2.6749	0.1759	0.0954	7.41
7.358	252.61	0.0737	768.66	22.79	2.1445	0.0105	0.0282	510.61	640.10	2.6749	0.1759	0.0954	7.41
7.358	252.67	0.0843	768.78	22.79	2.1449	0.0105	0.0282	510.77	640.10	2.6754	0.1759	0.0954	7.41
7.358	252.73	0.0949	768.91	22.80	2.1449	0.0105	0.0282	510.93	640.10	2.6758	0.1759	0.0954	7.41
7.358	252.79	0.1054	769.03	22.80	2.1453	0.0105	0.0282	511.09	639.94	2.6758	0.1759	0.0954	7.40

55401

REV

NOTES

MODIFICATIONS

1. The existing Stripper Reboiler Heater, Equipment No. 51-B-06A, is suitable for the revamp conditions with a change in service (now Equipment No. 56-B-01 Reformate Splitter Reboiler). 0
2. No other modifications, except those given below are required for the existing heater as long as it is "fit for service", which shall be determined by CTCI: (Also, see "Revamp Notes" below). 0
   a. Existing parallel heater, Equipment No. 51-B-06B, shall be IDLED for the revamp operation. Isolate the idled heater (process and fuel) as required.
   b. UOP combustion conditions shown on Sheet 2 of this data sheet are based on 'Sales Gas' composition given in UOP document number 951606 - A.4 "Basic Engineering Design Questionaire, Rev. 3. CTCI/Heater 0
   Vendor shall confirm the adequacy of the existing burners and fuel gas supply system for the full range of fuel gas compositions anticipated for the revamp operation as shown in latest revision of Fluor document SP-000-AA-5002 "Basic Engineering Design Data". 2
   c. Heater vendor shall verify the adequacy of the process coils and manifolds for full vacuum at 215°C.
   d. UOP estimates that the forced draft fan inlet box dampers will be almost fully closed. Heater vendor shall confirm the suitability of the forced draft combustion air system for revamp operation. If system turndown is an issue, consider operating with even higher excess air rates, bleed air through the idled heater, modify burners for natural draft operation (i.e., forced draft air system idled).
   e. Provide NPS 3 Sch 80 ASTM A 312 Gr TP310 open ended waste gas nozzle located within the burner circle for disposal of 136 kg/h of waste stream with a composition of 9.40 mol% H2O, 17.0 mol% Benzene, 4.0 mol% Toluene, 56.2 mol% Nitrogen and 13.4 mol% Oxygen at an estimated pressure of 0.035 bar (g) and estimated temperature of 45°C. The molecular weight of the mixture is 38.69.

REFERENCE DATA

1. Born API Fired Heater Data Sheet Rev. 4 dated 2-Apr-96.
2. Born Burner Data Sheet Spec. No. 2881/0400/127/AB Rev. 0 dated 7-Mar-96.
3. Born Overall Layout & Plot Drawing No. 2881-51B06-01A Rev. 0 dated 7-Mar-96.
4. Born General Arrangement (Elevations) Drawing No. 2881-51B06-02A Rev. 0 dated 7-Mar-96.
5. Born FD Fan Data Sheet (Equipment No. 51-K-03 A & B) (4 Pages) [Title block illegible].

REVAMP NOTES

1. The revamp conclusions are based on the assumption that all existing coil components that are to be re-used for the revamp are identical to the vendor's data sheets referenced above, and:
   a. The tubes/fittings have normal original wall thickness.
   b. No significant corrosion or metallurgical damage has occurred.
   c. The tubes/fittings are not severely warped, bulged, nor oxidized.
   d. The tubes/fittings are free of internal and external deposits.
   Changes to this information will require further review of this specification by UOP.
2. CTCI/heater vendor is responsible for the following: 0
   a. Providing confirmation and guarantee that the existing heater will meet UOP's predicted thermal and hydraulic performance while complying with specified noise and emissions limits.
   b. Conducting a detailed field inspection based upon consultation with the component vendors. 0
   c. Ensuring that the heaters and ancillary equipment are refurbished, as required, to provide for safe operation at the revamp conditions. 0
   d. Verifying that the structural and mechanical integrity of the heater and ancillary equipment is satisfactory for the revamp conditions. 0
   e. Ensuring compliance with existing codes and practices, including environmental regulations. 0
   f. Ensuring that any replacement parts or midifications shall comply with the same standards as the original equipment. 0
   g. Vendor shall verify capacity of 56-K-03 A/B (Existing 51-K-03 A/B) and duty of 56-E-22 (Existing 51-E-32). 0

55401

CTCI CORPORATION

4-1

CLIENT : CHIYODA / ARABIAN INDUSTRIAL FIBERS CO LTD
CHIYODA PO : SAY POE 0002
LOCATION : IBN RUSHD PTA & AROMATICS PLANT PROJECT

EQUIPMENT : 51-B-06 STRIPPER REBOILER

REQUISITION NO : 22854-MR-000-B-501

RETURNED
JUL. 19. 1996
CHIYODA
V P C

RECVD
JUL. 1. 1996
CHIYODA
VPC

CHIYODA CORPORATION	
JOB NO. 51046	IBN RUSHD AROMATICS PROJECT
PO NO. SAYPOE0002	
REQ NO. 22854000B501	
IDENT NO. 22854000B501 DC0125	4
A-NO COMMENTS PROCEED WITH FABRICATION	SAY TEAM
B-PROCEED WITH FABRICATION COMMENTS TO BE CONSIDERED	PYD
C-DO NOT PROCEED WITH FABRICATION	DATE Jul. 11 '96

PURCHASER'S PERMISSION TO PROCEED OR REVIEW TAKEN ON VENDOR PRINTS SHALL NOT RELIVE VENDOR FROM ITS RESPONSIBILITIES OR LIABILITIES UNDER PURCHASE ORDER

REV	INITL	DATE	REVISIONS	CHKD	DATE	APP	DATE
4	BP	10/5/96	PER CLIENT COMMENTS	RW	21/5/96	[illegible]	28/5/96
3	BP	7/3/96	AS NOTED.	RW	7/3/96	[illegible]	11/3/96

CAT CODE : D1

UNIT : 51-B-06

Born International

TITLE : FIRED HEATER DATA SHEET

SPEC NO : 2881-51B06-ETD002/A.

NOTE: THIS DRAWING IS THE PROPERTY OF BORN INTERNATIONAL [illegible]

SHEET 1 OF 9 REV 4

MANUFACTURE AND CONSTRUCTION TO BE CARRIED OUT STRICTLY IN ACCORDANCE WITH THE REQUIREMENTS OF THIS DRAWING SPECIFICATION.
NO CHANGES ARE TO BE MADE WITHOUT THE PRIOR AGREEMENT OF THE CHIEF ENGINEER OR THE ORGANISING SECTION WITHIN ENGINEERING DEPARTMENT.

064003

9-3-1

55401

CTCI CORPORATION

~~ALTERNATE DESIGN~~

BORN

WORLD-WIDE MANUFACTURERS OF DIRECT FIRED HEATERS
SI UNITS

Service /Item	Stripper Reboiler 51B06		
Type	rad con V-C	Plant Location	
		Quantity	2
Owner		Ref. No	
Purchaser	Chiyoda	Ref. No.	
Date	07/03/96	Born Ref No.	BJ 2881
By:	BDP	Page 1 of	8

PROCESS DESIGN CONDITIONS				
1. Total duty heater, MW	94.04			
2. Heater section	**Radiant**	**Conv.**		
3. Service per heater	Stripper Reboiler	51B06		
4. Heat Absorption per heater, MW	32.28	14.74		
5. Fluid Name	HC			
6. Flow rate, kg/hr	746364			
7. Flow rate, dm(cube)/s				
8. Press drop (allow, clean/fouled), bar	3.8			
9. Press drop (calc, clean/fouled), bar	2.3			
10. Fouling allowance, m(sq)-C(deg)/W				
11. Therm conductivity of coke/scale, WmC(deg)				
12. Avg. radiant flux density (allowable), W/m(sq)	31546			
13. Avg. radiant flux density (calculated), W/m(sq)	30622			
14. Avg. convection flux density (allowable), W/m(sq)				
15. Avg. convection flux density (calculated), W/m(sq)		3341		
16. Max radiant flux density, W/m(sq)	55120			
17. Max convection flux density, W/m(sq)		60329		
18. Velocity limitation, m/sec				
19. Max. Allowable Inside film temperature, C(deg)				
INLET CONDITIONS:				
20. Temperature, C(deg)		212		
21. Pressure,barg		12.80		
22. Liquid flow, kg/hr		746364		
23. Vapor flow, kg/hr		0		
24. Density of Liquid @ T. P. , S.G		0.671		
25. Vapor, molecular weight				
26. Viscosity, liquid, mPa.s		0.166		
27. Viscosity, vapor, mPa.s				
28. Specific heat, liquid, KJ/kgC(deg)		2.477		
29. Specific heat, vapor, KJ/kgC(deg)				
30. Thermal conductivity, liquid, W/mC(deg)		0.101		
31. Thermal conductivity, vapor, W/mC(deg)				
OUTLET CONDITIONS:				
32. Temperature, Degree C	224			
33. Pressure, barg	9.00			
34. Liquid flow, kg/hr	223909.2			
35. Vapor flow, kg/hr	522454.8			
36. Density of Liquid @ T. P. , Kg/cuM	0.664			
37. Vapor, molecular weight	91.9			
38. Viscosity, liquid, mPa*s	0.166			
39. Viscosity, vapor, mPa*s	0.011			
40. Specific heat, liquid, KJ/kgC(deg)	2.535			
41. Specific heat, vapor, KJ/kgC(deg)	1.975			
42. Thermal conductivity, liquid, W/mC(deg)	0.099			
43. Thermal conductivity, vapor, W/mC(deg)	0.027			
REMARKS				
44. Distillation data should be attached for vaporization service				
45. Other				

55401

CTCI CORPORATION
~~service per unit~~
ALTERNATE DESIGN

BORN

WORLD-WIDE MANUFACTURERS OF
DIRECT FIRED HEATERS
SI UNITS

Service /Item	Stripper Reboiler 51B06		
Unit	rad con V-C	Plant Location	
Type		Quantity	2
Owner		Ref. No.	
Purchaser	Chiyoda	Ref. No.	
Date:	07/03/96	Born Ref No.	BJ 2881
By:	BDP	Page 2 of	8

Combustion Design Conditions per heater

1. Type of fuel	GAS
2. Excess air, percent	15
3. Calc heat release, MW (LHV)	54.05
4. Calc fuel efficiency, percent (LHV)	
5. Calc thermal efficiency, percent (LHV)	87.0
6. Guaranteed thermal efficiency, percent (LHV)	86.0
7. Radiation loss, percent of heat rel (LHV)	2.00
8. Flue gas temp. leaving radiant section, C(deg)	834
9. Flue gas temp. leaving conv section, C(deg)	250
10. Flue gas temp. leaving air heater (uncorrected), C	
11. Flue gas temp. leaving air heater (corrected), C(de	
12. Max flue gas mass vel thru conv sect, kg/s* m(sq)	1.41
13. Volumetric heat release, W/m(cube) (LHV)	
14. Ambient air temperature, C(deg)	15 combustion design
15. Air temperature, stack design, C(deg)	50
16. Air temperature leaving air heater, C(deg)	
17. Altitude above sea level, m	0
18. Draft @ Bridgewall,mm wg	3.00
19. Draft @ Burner, mm wg	14.92
Fuel Characteristics	
20. Type of Fuel	gas
21. Heating value (LHV), KJ/kg	
22. Heating value (LHV), KJ/Nm(cube)	23376
23. sp Gr. @ P, T.	0.306 @15C
24. H/C ratio (by weight)	
25. Viscosity, @ _____ C(deg), mPa*s	
26. Viscosity, @ _____ C(deg), mPa*s	
27. Total salts, ppm	
28. Vanadium, ppm	
29. Sodium, ppm	
30. Fixed nitrogen, ppm	
31. Sulfur, percent by weight	
32. Hydrogen sulfide, percent by volume	
33. Ash, percent by weight	
34. Liquids: ASTM initial boiling point, C(deg)	
35. ASTM end point, C(deg)	
36. Gases: Molecular weight	8.88
37. Composition, mol percent	
38. Temperature at burner, C(deg)	15.6
39. Fuel pressure (available @ burner), kPa	138
40. Atomizing air stream pressure, kPa	

Mechanical Design Conditions (General:)

41. Plot limitations _____ Min Stack Ht. _____ m
42. Tube limitations _____ Noise Limitations _____

Structural Design Data:

1. Wind Velocity, m/s — Wind occurrence _____
2. Wind exposure — Seismic Zone _____
3. Minimum ambient air temperature C(deg) — 0

9-3-8

55401

CTCI CORPORATION
~~ALTERNATE DESIGN~~

BORN

WORLD-WIDE MANUFACTURERS OF DIRECT FIRED HEATERS
SI UNITS

Service/Item	Stripper Reboiler 51B06		
Unit	rad con V-C	Plant Location	
Type		Quantity	2
Owner		Ref. No.	
Purchaser	Chiyoda	Ref. No.	
Date:	07/03/96	Born Ref No.	BJ 2881
By:	BDP	Page 3 of	8

				Radiant Shock
Coil Design: (RADIANT)				
4. Design basis of tube wall thk. (code or specs)	API 530			API 530
5. Design basis for rupture strength, (min or avg)				
6. Design life, hr	100000			100000
7. Elastic design pressure, bar	15.80			15.80
8. Rupture design pressure, bar				
9. Temperature allowance, C(deg)	28			28
10. Corrosion allowance, mm	3			3
11. Stress relieve (YES or NO)	NO			NO
12. Weld inspection requirements radiography, %	100			100
13. Hydrostatic test pressure, BARG	27.4			27.4
14. Max tube metal temperature (clean) C(deg)	289			
15. Design tube metal temperature C(deg)	317			317
16. Inside film coefficient, W/m C(deg)	1124			1120
Coil Configuration: (RADIANT)				
17. Tubes (vertical or horizontal)	VERT			HORIZ
18. No. of flow passes	8			8
19. Effective tube length, m	17.91			8.077
20. Bare tubes, number	80			16
21. Bare tubes, exposed surface, m(sq)	985.97			68.28
22. Bare tubes, total exposed surface, m(sq)	1054.25			
23. Tubes, inline or staggered	IN LINE			STAGGERED
24. Tube spacing, C to C, mm	406.4			304.8
Tubes: (RADIANT)				
25. Material (ASTM spec. or grade)	A106 GRB			A 106 GRB
26. Outside diameter,mm	219.1			168.3
27. wall thickness , mm or Sch	sch 40aw			sch 40 aw
28. Overall tube length, m				
29. No. of intermediate welds	80			None
30. Distance from Center Line of tube to wall, mm	305			152
Heater Section	**Radiant**			
Plug-Type Headers:				
31. Location (one end or both ends)	None			None
32. Manufacture and type				
33. Nominal rating				
34. Welded or rolled joint				
Return Bends:				
35. Location (header box or firebox)	Firebox			Header box
36. Material (ASTM spec and grade)	A234 WPB			A 234 WPB

064006

Rev. 4 BDP 2/4/96

DSHTB.XLS

9-3-96

55401

CTCI CORPORATION

ALTERNATE DESIGN

service per unit

BORN

WORLD-WIDE MANUFACTURERS OF
DIRECT FIRED HEATERS
SI UNITS

Service/Item	Stripper Reboiler 51B06		
Unit	rad con V-C	Plant Location	
Type		Quantity	2
Owner		Ref. No.	
Purchaser	Chiyoda	Ref. No.	
Date:	07/03/96	Bom Ref No.	BJ 2881
By:	BDP	Page 4 of	8

	BARE	EXT.	EXT.	EXT.
Coil Design: (CONVECTION)				
4. Design basis of tube wall thk. (code)	API 530	API 530	API 530	API 530
5. Design basis for rupture strength				
6. Design life, hr	100,000	100,000	100,000	100,000
7. Elastic design pressure,BAR	15.8	15.8	15.8	15.8
8. Rupture design pressure, BAR				
9. Temperature allowance, C(deg)	28	28	28	28
10. Corrosion allowance, mm	3	3	3	3
11. Stress relieve (yes or no)	NO	NO	NO	NO
12. Weld inspection requirements radiography, %	100	100	100	100
13. Hydrostatic test pressure, Barg	27.4	27.4	27.4	27.4
14. Max tube metal temperature (clean), C(deg)	255	281	276	266
15. Design tube metal temperature, C(deg)	283	309	304	294
16. Inside film coefficient, W/m(sq) C(deg)	1823	1828	1834	1840
Coil Configuration: (CONV.)				
17. Tubes (vertical or horizontal)	HORI.	HORI.	HORI.	HORI.
18. No. of flow passes/tubes per row	8 16	8 16	8 16	8 16
19. Effective tube length, m	8.077	8.077	8.077	8.077
20. Bare tubes, number	32	0	0	0
21. Bare tubes, exposed surface, m(sq)	136.66			
22. Ext tubes ,number	0	16	16	64
23. Ext surface tubes, exp. surface, m(sq)		290.50	543.57	3441.66
24. Ext surface tubes, total exp. surface, m(sq)		4275.73		0
25. Tubes, staggered/inline	STAGGERED	STAGGERED	STAGGERED	STAGGERED
26. Tube spacing, C to C , mm	305	305	305	305
Tubes: (CONVECTION)				
27. Material (ASTM spec. or grade)	A106 GRB	A106 GRB	A106 GRB	A106 GRB
28. Outside diameter, mm	168.3	168.3	168.3	168.3
29. wall thickness,m m or Sch	sch 40aw	sch 40 aw	sch 40 aw	sch 40 aw
30. Overall tube length, m				
31. No. of intermediate welds	None	None	None	None
32. Distance from tube center line to wall, mm	152	152	152	152
Description of Extended Surface:				
33. Type (studs, serrated fins or solid fins)		SOLID FIN	SOLID FIN	SOLID FIN
34. Material		Car/Stl	Car/Stl	Car/StL
35. Fin Height, mm		12.70	25.40	25.40
36. Fin Thickness, mm		1.30	1.30	1.30
37. Fins Per m		118	118	197
38. Max tip temperature, C(deg)		331	389	334
39. Extension ratio		4.252	7.956	12.594
Heater Section			**Convection**	
Plug-Type Headers:				
40. Location (one end or both ends)			NONE	
41. Manufacture and type				
42. Nominal rating				
43. Welded or rolled joint				
Return Bends:				
44. Location (header box or firebox)	Header box	Header box	Header box	Header box
45. Material (ASTM spec and grade)	A-234-WPB	A-234-WPB	A-234-WPB	A-234-WPB

CTCI CORPORATION

ALTERNATE DESIGN

BORN

WORLD-WIDE MANUFACTURERS OF
DIRECT FIRED HEATERS
SI UNITS

Service/Item	Stripper Reboiler 51B06		
Unit	rad con V-C	Plant Location	
Type		Quantity	2
Owner		Ref. No.	
Purchaser	Chiyoda	Ref. No.	
Date:	07/03/96	Born Ref No.	BJ 2881
By:	BDP	Page 5 of	8

Heater Section Continued:	Radiant		Convection	
Terminals:				
1. Type (welded or flanged)	Flanged		Flanged	
Inlet:				
2. Material (ASTM spec and grade)			A105	
3. Size/rating, schedule or thickness			6" SCH 40 AW 300#	
4. Number of terminals			8 PER HEATER	
Outlet:				
5. Material (ASTM spec and grade)	A105			
6. Size/rating, schedule or thickness	8" SCH40AW 300#			
7. Number of terminals	8 PER HEATER			
Manifolds:				
8. Connection to tubes (weld or flanged)	Flanged			
9. Location (internal or external)	External			
Inlet:				
10. Material (ASTM spec and grade)	None			
11. Size/schedule or thickness				
12. Flange/material (ASTM spec and grade)				
13. Flange size and rating				
Outlet:				
14. Material (ASTM spec and grade)	A106 GrB			
15. Size schedule or thickness	26" x STD WT			
16. Flange/material (ASTM spec and grade)	None (Connections to Heater terminals only)			
17. Terminal size and rating	26" x STD WT	Bevelled		
Crossovers:				
18. Location (internal or external)	External			
19. Pipe mat'l (ASTM spec and grade)	A106 GRB			
20. Pipe size/schedule or thickness	6" SCH40AW			
21. Flange mat'l (ASTM spec and grade)	None			
22. Flange size and rating				
Tube Supports:				
23. Location (top, bottom, intermediate)	TOP		INTER	ENDS
24. Material (ASTM spec and grade)	25/20 CR NI		25/20CR NI	C.S. PLATE
25. Spacing			4150 mm	
26. Coating (type and thickness)				100 mm LW cast
Tube Guides:				
27. Location and spacing (Top/Bottom)	BOTTOM			
28. Material (ASTM spec and grade)	310 SS			
Settings:				
Floor:				
29. Lining: Thickness - Hot face temp. - calc - design	200	819 C		
30. Matl/thk/service temperature	200 MM LW CASTABLE			
31. Anchor (type & matl)				
32. Casing: Thickness - Material - Temperature	6mm	C.S. plate		
Exposed Vertical Walls:				
33. Lining: Thickness - Hot face temp. - calc - design				
34. Matl/thk/service temperature				
35. Anchor (type & matl)				
36. Casing: Thickness - Material - Temperature				

064008

9-3-6

55401

CTCI CORPORATION
~~ALTERNATE DESIGN~~

BORN

WORLD-WIDE MANUFACTURERS OF
DIRECT FIRED HEATERS
SI UNITS

Service/Item	Stripper Reboiler 51B06		
Unit	rad con V-C	Plant Location	
Type		Quantity	2
Owner		Ref. No.	
Purchaser	Chiyoda	Ref. No.	
Date:	07/03/96	Born Ref No.	BJ 2881
By:	BDP	Page 6 of	8

Mechanical Design Conditions (continued)
Heater Section (continued):
Shielded Vertical Walls:

1. Lining: Thickness - Hot face temp. - calc - design	125	554 C	1260 C
2. Thk/Mat'l/service temperature	50 -128 kg/ cu m CFNB + 75 -96 kg/ cu m CFNB+3mm stalastic		
3. Anchor (type & matl)	TP 310 SS Studs and Washers		
4. Casing: Thickness - Material - Temperature	6mm	C.S. plate	

Arch:

5. Lining: Thickness - Hot face temp. - calc - design	150	819 C	1260 C
6. Thk/Mat'l/service temperature	50mm128kg/cumCFNB+100mm96 kg/cum CFNB+3mm stlastic		
7. Anchor (type & matl)	TP 310 SS Studs and Washers		
8. Casing: Thickness - Material - Temperature	6mm	C.S. plate	

Convection Walls:

9. Lining: Thickness - Hot face temp. - calc - design	125	534 C	1100 C
10. Thk/Mat'l/service temperature	125 mm LW castable		r1
11. Anchor (type & matl)	v' type	304 SS	
12. Casing: Thickness - Material - Temperature	6mm	C.S. plate	

Breeching:

13. Lining: Thickness - Hot face temp. - calc - design	75	249 C	1093 C
14. Thk/Mat'l/service temperature	LW CASTABLE		
15. Anchor (type & matl)	v' type	CS	
16. Casing: Thickness - Material - Temperature	5		

Flue Gas Ducts:

17. Location	top of convection section
18. Lining (internal or external)	internal
19. Thickness & Material	50 mm LW castable
20. Anchor, type and material	CS 'v' anchors
21. Hot face design temperature	
22. Cold face design temperature	

Combustion Air Ducts:

23. Location	FD fan to burner plenums
24. Lining (internal or external)	
25. Thickness and Material	
26. Anchor, type and material	
27. Hot face / cold face design temperature, C(deg)	

Header Boxes:

28. Location	Conv. ends	Hinged doors/bolted	Bolted
29. lining (Thickness & Material)	50 mm LW castable		
30. Anchor (type and material)	v' type	CS	
31. Door/panel (matl and thickness)	6mm	C.S. plate	

Burner Windboxes

32. Lining (internal or external)	internal	Matl & thk.	mineral wool
33. Anchor (type and matl)	CS ' v '		
34. Casing: Materials and thk.	CS 5		
35. Hot face design temp., C(deg)		Cold face design temp.,C	

CTCI CORPORATION

ALTERNATE DESIGN

BORN

WORLD-WIDE MANUFACTURERS OF
DIRECT FIRED HEATERS
SI UNITS

Service /Item	Stripper Reboiler 51B06		
Unit	rad con V-C	Plant Location	
Type		Quantity	2
Owner		Ref. No.	
Purchaser	Chiyoda	Ref. No.	
Date:	07/03/96	Born Ref No.	BJ 2881
By:	BDP	Page 7 of	8

Mechanical Design Conditions (continued)
Heater Section (continued):
Stack:

1. Location	top of heater	Corr Alow	
Inside met. dia., mm	2713	Ht. above grade: mm	
2. Stack design metal temperature.		Stack length, mm	24689
3. Plate, min. thickness, mm	6	Material:	Carbon steel
4. Lining : (Internal or External)	Internal	Extent of lining	To top
5. Thickness and Material, mm	50	LW Castable	
6. Anchor, type and material:	v' type	CS	
Bridgewall:			
7. Height:, mm	none		
Matl and thickness:		Location	
Dampers:			
8. Location	Stack		
9. Material of blade	TP304SS		
10. Material of shaft	TP304SS		
11. Bearing type	PILLOW BLOCK		
12. Multiple or single blade	Multiple blade		
13. Desc of provision for operation	actuated		
14. Location and type of operator			

Miscellaneous:
Platforms:

Location/No.	Width	Length/Arc	Access Stairs/Ladder	Grade
15. Hearth / One	1100 mm	360 DEGREE	1stair/1ladder	
16. Convection Side(s) /One	1100 mm		1 LADDER	
17. Convection End(s) /Two	1100 mm		2 WALKWAYS	
18. Rad Intermediate /One	1100 mm		1 Ladder	
19. Stack Damper / One	1100 mm	270 DEGREE	1 LADDER	
20. Stack Sample Port				
21. Type of flooring				

Doors:	Number	Location	Size	Hinged/Bolted
22. Access Doors	2	FLOOR	450 x 600	Hinged
23				
24. Observation Doors	12	RAD SIDE	127 x 406	HINGED(20-std-03)
25				
26				
27. Steam Lance Doors	4	CONV SIDE	600 x 150 bolted	(BLS-D-106)
28				
29 Explosion Door	1	RAD SIDE	473 x 432	HINGED
30				
31				

Instruments and Aux. connections	Number	Size	Type
32. Process fluid temperature			
33. Flue gas / combustion air temp.	SEE DRAWING No. 2281/403/126CA		
34. Flue gas / combustion air pressure	& 2281-51B06-02A & 02B		
35. Flue gas composition (sample)			
36. Snuffing steam	4	2" NPS	3000# CRG with Plug
37. Purge			
38. Vents and drains			
39. Tubeskin thermocouples			

064010

9-3-8

55401

CTCI CORPORATION
~~ALTERNATE DESIGN~~

4-9

BORN

WORLD-WIDE MANUFACTURERS OF
DIRECT FIRED HEATERS
SI UNITS

Service /Item	Stripper Reboiler 51B06		
Unit	rad con V-C	Plant Location	
Type		Quantity	2
Owner		Ref. No.	
Purchaser	Chiyoda	Ref. No.	
Date	07/03/96	Born Ref No.	BJ 2881
By:	BDP	Page 8 of	8

Mechanical Design Conditions (continued)
Heater Section (continued):

1. Painting requirements: 22854-SP-000-X-002
   System 2 to Prime coat only
   final coat at site
2. Galvanizing requirements. Ladders and Platforms to ASTM A123
3. Internal coatings (casing, ducts, stack) Stalastic behind ceramic fibre blanket
4. Fireproofing requirements. None

Burner and Auxiliary Equipment:

Burners:

5. Manufacture/type J.Z. Type PSFG FD gas only Location rad floor
6. Designation/size 16 Number: 12 Fuel: gas
7. Heat rel. (MW per burner) at design excess air (Max\Norm\Min) 4.95 (110%) 4.50
8. Design press drop across burner 50mm @ max heat release
9. BCD 5100 mm
   Distance burner centerline to unshielded refractory: 17907 mm
10. Burner pilot:
    Capacity (KW) 20 Fuel: Gas Fuel press
    Fuel Pressure/ Fuel: Type of ignition: AUTO
11. Special requirements: (flame detection devices, safety interlocks etc.) UV SCANNERS

Sootblowers:

12. Location SPACE FOR FUTURE INSTALLATION
13. Manufacture and type
14. Number
15. Maximum cleaning radius, mm
16. Lane dimensions (min. clearance)
17. Orientation (horizontal or vertical)
18. Cleaning medium
19. Supply pressure/temperature
20. Flow rate per blower , kg/s
21. Materials of construction
22. Driver type (manual, air, or elec.)
23. Control systems type (auto or manual, sequential, local, or remote panel)

064011

55401

CTCI CORPORATION

JOHN ZINK
A KOCH INDUSTRIES COMPANY
PARTS AND SERVICE, CALL (918) 234-2751 FAX (918) 234-2700

1 : CUSTOMER : BORN HEATERS INTERNATIONAL	DATA SHEET NO.: D-BU-A17229-802 — S.O. NO.: AO-17229
1A: P.O. NO.: 010990-2881	BURNER DATA SHEET FOR: PSFG-16R STAGED GAS BURNER ASSEMBLY
1B: USER : ARABIAN INDUSTRIAL FIBERS	HEATER NO.: 1 51-B-06 A/B STABILIZER REBOILER
1C: JOBSITE : YANBU CITY, SAUDI ARABIA	
1D: ELEVATION : < 305m	
1E: QUAN. REQ'D.: 24	
1F: JOHN ZINK SERIAL NO.: AO-17229-2	
2 : TAG NO'S.: B-602-1 BURNER ASSEMBLY, B-602-2 MORTAR	
ABOVE TAGS PRECEDED BY: UNIT 51-B-06 A/B 1	
STABILIZER REBOILER	
2A: REF. DWG'G.: B-BU-A17229-602 PSFG-16R BURNER ASSEMBLY	
B-BU-17229-608 PILOT ASSEMBLY	

3 : FUEL GAS:	REFINERY GAS (3)	PROPANE (1)			
3A: LHV (KCAL/NM^3):	6,000	21,498			
3B: M.W:	9.83	43.53			
3C: TEMP.: (°C)	60	38			

~~4 : FUEL OIL:~~	~~A~~	~~B~~	~~C~~	~~D~~	~~E~~
~~4A: LHV (BTU/LB):~~					
~~4B: API GR.:~~					
~~4C: TEMP.: (°F)~~					

~~4D: RECOMMENDED OPERATING VISCOSITY: 250 SSU (MAX)~~

5 : PILOT ORIFICE DRILLED: 1/16" DIA

5A: PILOT GAS PRESSURE: .48 - 1.03 Barg. (NATURAL GAS)

6 : DRAFT LOSS : 50mm W.C. @ 4.95 MW/HR. W/ 15% X-S AIR @ 15.6 °C.

7 : HEAT RELEASE PER BURNER (NET):

7A: MAX.:	4.95	M.W
7B: NORM.:	4.50	M.W
7C: MIN.:	1.65	M.W

TIP DRILLINGS : 2
PRIMARY: (4) #2 MTD F.P.
(6) 1/16" DIA. I.P
STAGED: (2) LTR "B" F.P.
(2) #48 MTD. I.P.

CAPACITY - PRESSURE CURVE

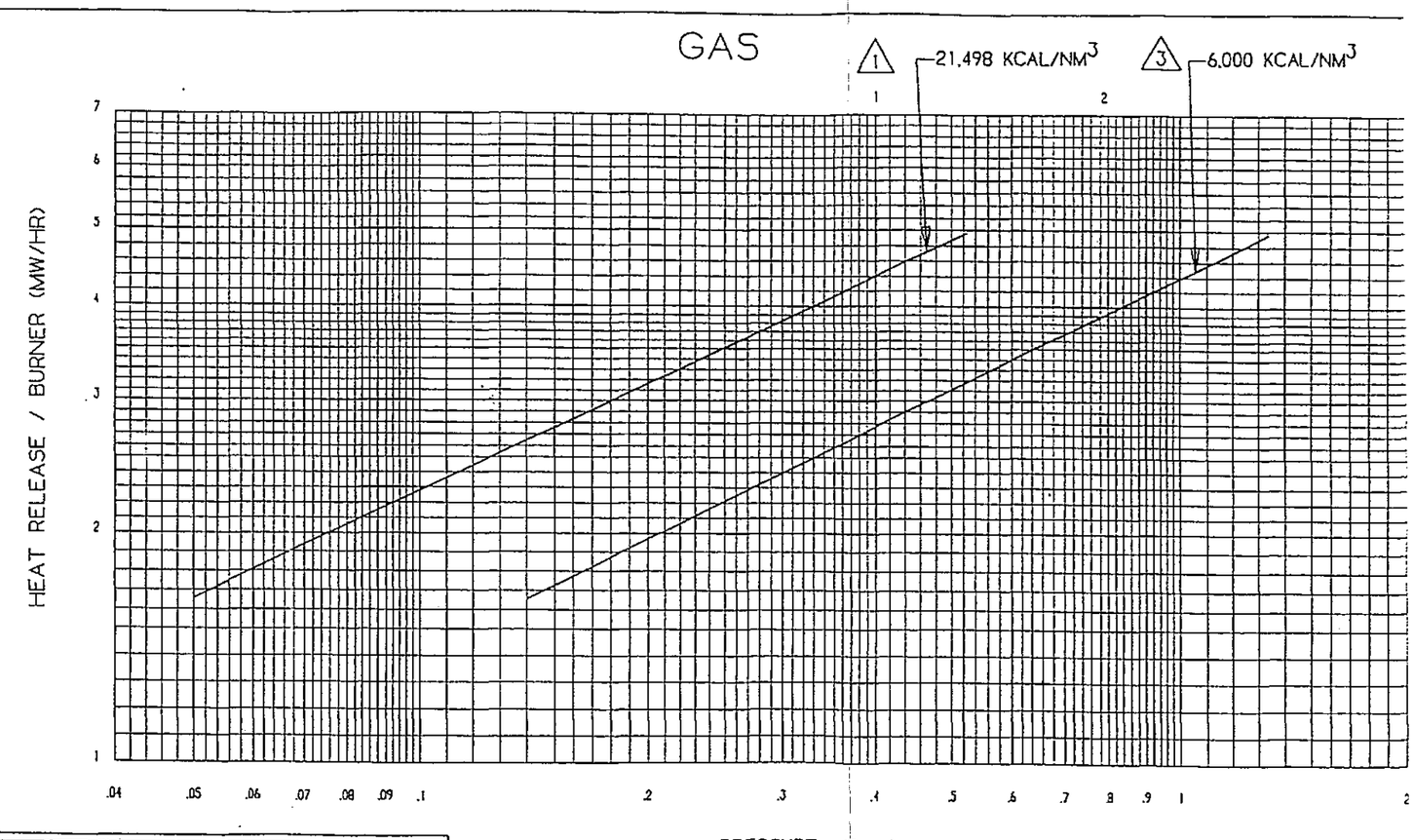

BORN DOCUMENT NO.				
JOB NO.	REQN. NO.	ITEM NO.	SUFFIX	REV.
2881	0400	127	AB	03

CHIYODA CORPORATION
JOB NO. 51046 IBN RUSHD AROMATICS PROJECT
PO NO. SAYPOE0002
REQ NO. 228540008501
IDENT NO. 228540008501-DC0039

A-NO COMMENTS PROCEED WITH FABRICATION
B-PROCEED WITH FABRICATION COMMENTS TO BE CONSIDERED
C-DO NOT PROCEED WITH FABRICATION
SAY TEAM
DATE 4 Sep. 96
PURCHASER'S PERMISSION TO PROCEED OR REVIEW TAKEN ON VENDOR PRINTS SHALL NOT RELIEVE VENDOR FROM ITS RESPONSIBILITIES OR LIABILITIES UNDER PURCHASE ORDER

064025

DR.: J.L	DATE: 1-22-96	CERTIFIED
CK.:	DATE:	S.N.
APP.: TMY	DATE: 1-26-96	6-14-96

NO.	REVISION DESCRIPTION	BY	CK	APP	DATE
3	REVISED AS NOTED PER CUSTOMER COMMENTS/ VDR 50319	T.T	TOM	TMY	8-14-9
2	REV'D TIP DRILLING PER VDR 50414/TEST 6-13-96	J.L		TMY	6-14-9
1	REVISED AS NOTED PER CUSTOMER COMMENTS/ VDR 50270	T.T	TOM	TMY	5/16/9

DDD:B-A17229-802

2

55401

CTCI CORPORATION

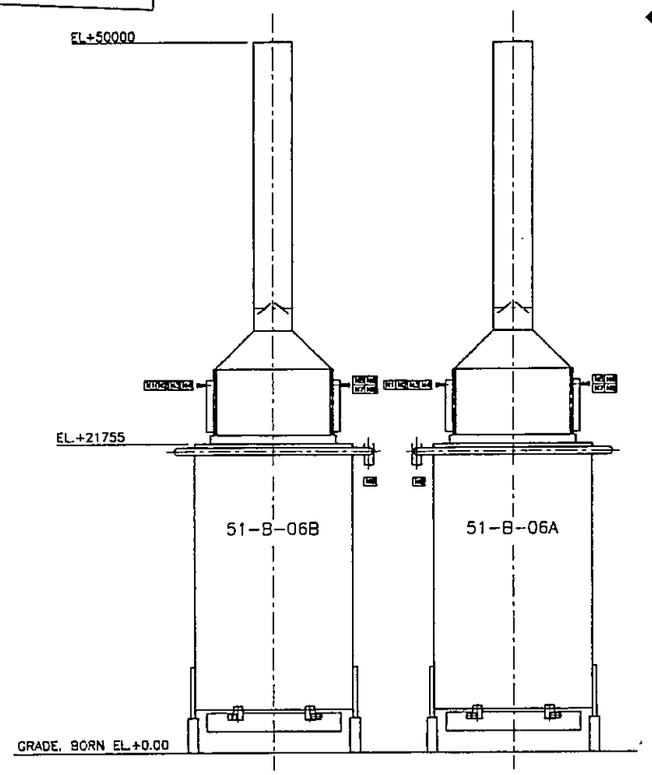

VIEW ON A-A

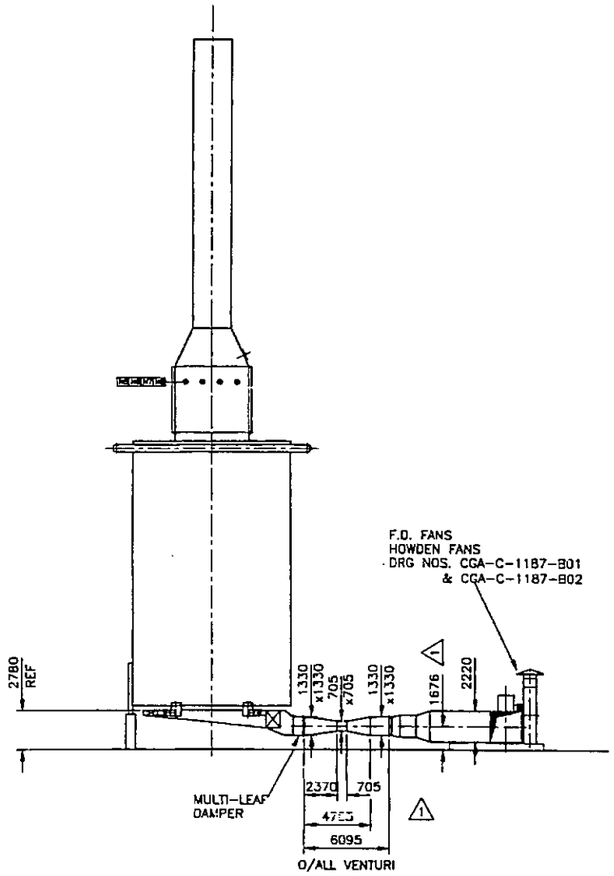

VIEW ON B-B

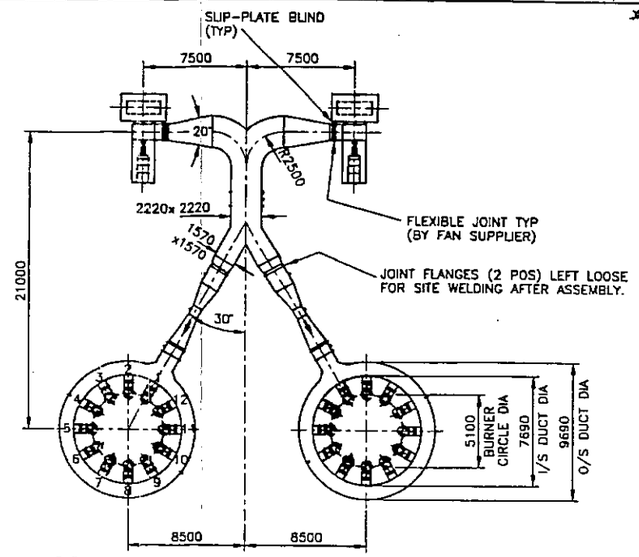

PLENUM DUCT FREE FLOW AREAS
AT BURNER 1,2,12 : 1.23 m²
AT BURNER 3,11 : 1.03 m²
AT BURNER 4,10 : 0.83 m²
AT BURNER 5,9 : 0.60 m²
AT BURNER 6,8 : 0.40 m²
AT BURNER 7 : 0.375 m²

PLAN ON BURNER DUCT

NOTE. ALL DUCT SIZES I/SIDE STEEL (DUCT UNLINED)

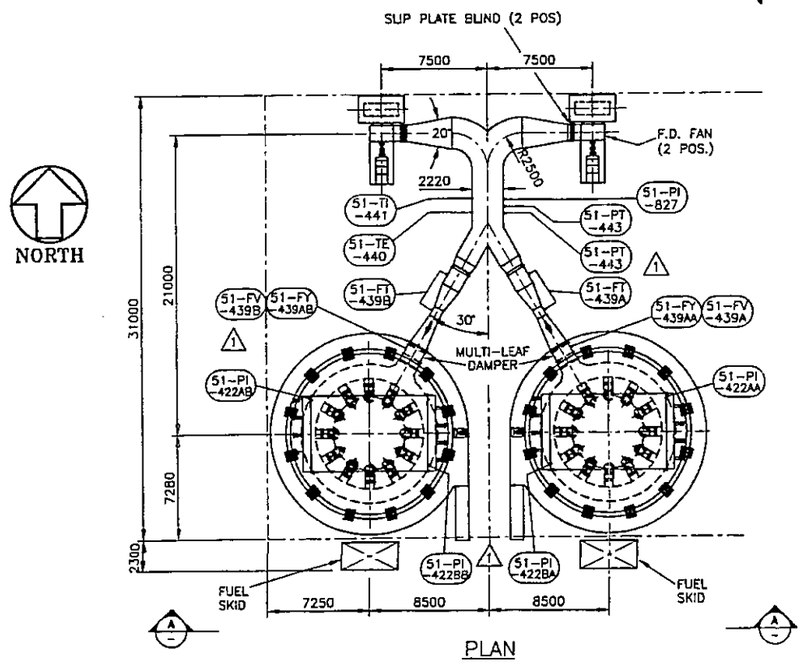

PLAN

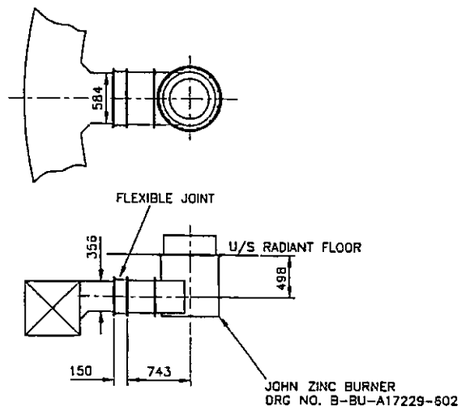

BURNER/DUCT DETAIL

RETURNED SEP - 2. 1996

RECVD AUG 1 2.1996 YOGA WPC

CHIYODA

JOB NO. 51046	IBN RUSHD AROMATICS PROJECT
PO NO.	SAYPOE0002
REQ NO.	22854000B501
IDENT NO.	22854000B501DW0025
A-NO COMMENTS PROCEED WITH FABRICATION	SAT TEAM
B-PROCEED WITH FABRICATION COMMENTS TO BE CONSIDERED	
C-DO NOT PROCEED WITH FABRICATION	DATE 22 Aug. '96

PURCHASER'S PERMISSION TO PROCEED OR REVIEW TAKEN ON VENDOR PRINTS SHALL NOT RELIEVE VENDOR FROM ITS RESPONSIBILITIES OR LIABILITIES UNDER PURCHASE ORDER

BORN

DRAWING TITLE: OVERALL LAYOUT & PLOT

SERVICE: 51-B-06 STRIPPER REBOILER

FOR: IBN RUSHD 064021

DRAWN:	DATE:	CHECKED:	DATE:	APPROVED:	DATE:
STEPHENS	JAN '96	G.T	29.2.96	RG	7.3.96

JOB No. 2881 | DRAWING NO. 2881-51B06-01A | REV. 1

REV. 1 BY	DATE	REV. 2 BY	DATE	REV. 3 BY	DATE	REV. 4 BY	DATE
RE	17.7.96	GT	28.7.96				

BURNER PLENUM DETAILS ADDED. FANS RE-POSITIONED.
OTHER REVISIONS PER CLIENT RETURN PRINT DATED 21.5.96.
BURNER PLENUM CENTRE-LINE DIM'N OF 1676 WAS 1326.

FILENAME: X:\DWGS\2881-5106-01A
SCALE: 1:200
ORIGINAL SIZE:

55401

CTCI CORPORATION

FOR TRUE ORIENTATION OF INSTRUMENTS, PLATFORMS ETC. SEE DRGS 2881-51B06-02B & -14A

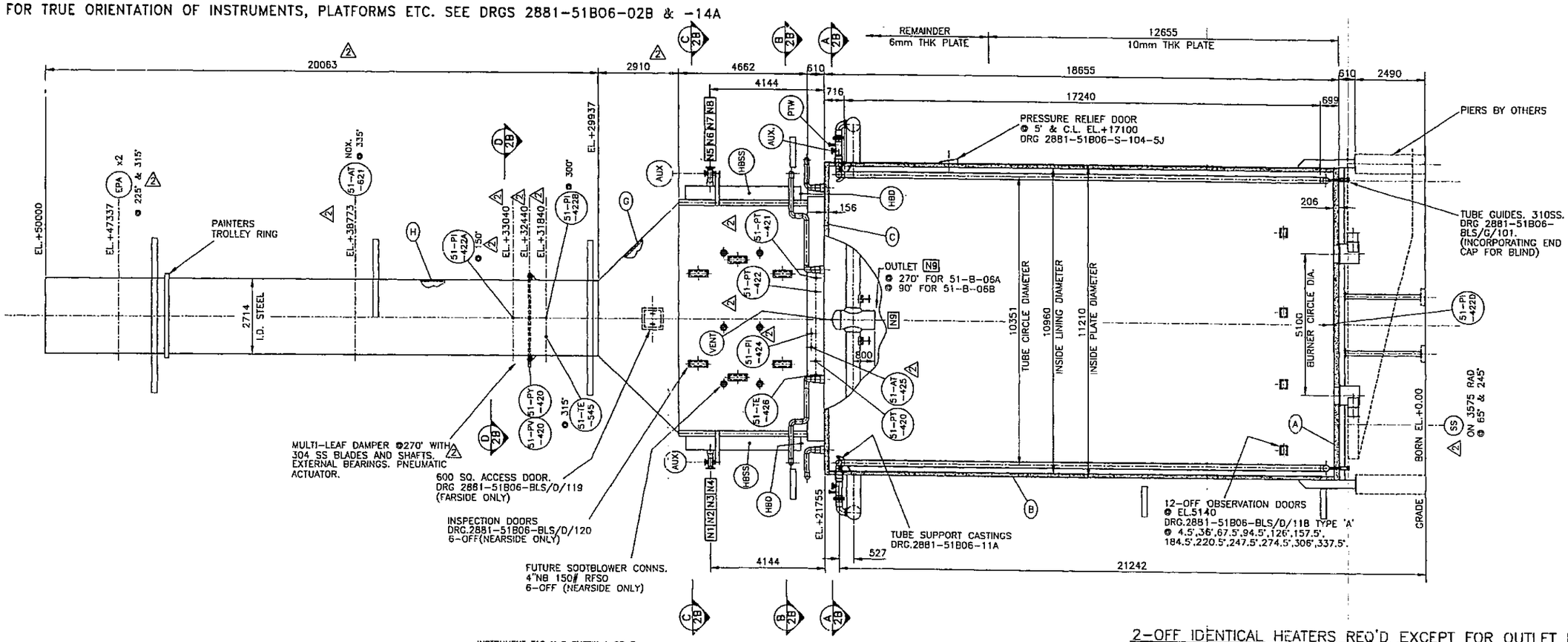

INSTRUMENT TAG NoS SUFFIX A OR B DEPENDING ON HEATER E.G.
51-PT-421A HEATER 51-B-06A
51-PT-421B HEATER 51-B-06B

2-OFF IDENTICAL HEATERS REQ'D EXCEPT FOR OUTLET POS'N N9 (@ 270° FOR 51-B-06A & @ 90° FOR 51-B-06B) AND HANDED WALKWAYS - SEE DRG 14A.

NOZZLE SCHEDULE (PER HEATER)

TAG	ITEM	DESCRIPTION
N1 TO N8	PROCESS INLETS	6"-300# RFWN FLANGE x SCH 40 AW
N9	PROCESS OUTLET	26"NB x 10mm AW TUBE MAT'L : ASTM A106B BUTT WELD (END BEVELLED)

MANIFOLD DATA

OUTLET MANIFOLD	20"NB x STD WT TUBE MAT'L : ASTM A106B

MAXIMUM ALLOWABLE FORCE & MOMENTS FOR NOZZLE INTERFACES.

MAXIMUM ALLOWABLE FORCES & MOMENTS ARE 3 TIMES THE VALUE STATED IN API 560

INSULATION SCHEDULE

TAG	DESCRIPTION
A	RADIANT FLOOR 200mm THK LW CASTABLE
B	RADIANT SIDE WALLS 125 mm THICK. 50mm-128 kg/m³ + 75mm-96 kg/m³ CFNB. ANCHORS-STUDS & WASHERS (TP310SS)
C	RADIANT ARCH 150 mm THICK. 50mm-128 kg/m³ +100mm-96 kg/m³ CFNB. ANCHORS-STUDS & WASHERS (TP310SS)
D	CONVECTION SIDE WALLS 125mm THK LW CASTABLE ANCHORS - BULLHORN (304SS)
E	CONVECTION END SHEETS 100mm THK LW CASTABLE ANCHORS - BULLHORN (304SS)
F	HEADER BOXES 50mm THK LW CASTABLE ANCHORS - BULLHORN (CS)
G	TRANSITION 75mm THK LW CASTABLE ANCHORS - BULLHORN (CS)
H	STACK 50mm THK LW CASTABLE ANCHORS - BULLHORN (CS)

NOTE: INTERIOR SURFACES OF RADIANT SIDE WALLS AND ARCH TO BE COATED WITH 3mm (WET THICKNESS) OF STALASTIC HIGH TEMPERATURE GRADE PROTECTIVE COATING.

INSTRUMENT SCHEDULE (PER HEATER)

TAG	DESCRIPTION	REMARKS
51-PI-422A TO 51-PI-422D INCL.	DRAFT GAUGES	
51-PT-420	PRESS. XMTR	
51-PT-421	PRESS. XMTR FOR BMS	
51-TE-426	THERMOCOUPLE AND WELL	
51-AT-424	OXYGEN ANALYZER	MOUNTING PLATE ATTACHMENT
51-AT-425	COMBUSTIBLE ANALYZER	MOUNTING PLATE ATTACHMENT
51-AT-621	NOX. ANALYZER	2"-150# RF FLANGE (304 SS)
51-TE-545	THERMOCOUPLE AND WELL	
51-PV-420	DAMPER TO STACK	
51-PY-420	I/P CONVERTER FOR DAMPER	

PROCESS OPERATING DATA

PROCESS-INLET
TEMPERATURE: 212-°C
PRESSURE: 12.8- Barg

PROCESS-OUTLET
TEMPERATURE: 224-°C
PRESSURE: 9- Barg

AUXILLARY SCHEDULE (PER HEATER)

TAG	QTY.	ITEM	DESCRIPTION
AUX	16	AUX. CONN.	3" 300# RFWN FLANGE WITH BLIND
HBD	2	HEADER BOX DRAIN	1 1/2" NPT 3000# COUPLING WITH PLUG
HBSS	2	HEADER BOX STEAM SNUFFING	1 1/2" NPT 3000# COUPLING WITH PLUG
PTW	8	PROCESS THERMO.	1" 300# RFLWN FLANGE
SS	2	STEAM SNUFFING	2" NPT 3000# COUPLING WITH PLUG
EPA	2	FLUE GAS ANALISER	4" 150# RFSO FLANGE c/w BLIND
VENT	1	MANIFOLD VENT	1" NPT 3000# COUPLING WITH PLUG

COIL DATA (PER HEATER)

RADIANT
80 - 219.1 mm O.DIA. (6" N.B.) X SCH. 40 A.W. TUBES PER A.S.T.M. A106 GRADE B.

CONVECTION
144 - 168.3 mm O.DIA. (6" N.B.) X SCH. 40 A.W. TUBES PER A.S.T.M. A106 GRADE B.
9 ROWS WITH 16 TUBES PER ROW (8 PASSES)
3 ROWS BARE
6 ROWS FINNED OVER A LENGTH OF 8305 mm WITH
1 ROW @ 12.7 HIGH X 1.3 THK X 118 PER METRE
1 ROWS @ 25.4 HIGH X 1.3 THK X 118 PER METRE
4 ROWS @ 25.4 HIGH X 1.3 THK X 197 PER METRE

CROSSOVERS
168.3 mm O.DIA. (6" N.B.) X SCH. 40 A.W. TUBES PER A.S.T.M. A106 GRADE B.

COIL WELDS GENERAL.
100% OF 100% OF WELDS TO BE RADIOGRAPHED

BURNERS (PER HEATER)

12 OFF FORCED DRAUGHT STAGED GAS ONLY BURNERS JOHN ZINC TYPE PSFG-16R

NOTES

1. ALL ELEVATIONS SHOWN ARE FROM GRADE, BORN EL.+0.00.

SURFACE PREPARATION & PAINTING DETAILS

HEATER & STACK SECTIONS
a) PREPARATION : SHOTBLAST TO SA 2 1/2
b) PRIMER : - PER SPEC. 22854-SP-000-X-002 REV. 1 SYSTEM S2 (PRIME COAT ONLY)

LADDERS & PLATFORMS
a) HOT DIPPED GALVANIZED :- PER ASTM A123

REFERENCE DRAWINGS

DRAWING No.	DESCRIPTION
-01A	OVERALL LAYOUT & PLOT
-02B	HEATER GENERAL ARRANGEMENT (ELEVS.)
-03A	FOUNDATION LOADING PLAN.
-11A	TUBE SUPPORT CASTINGS.
-11B	TUBE SUPPORT CASTINGS.
-12A	CONVECTION COIL DETAILS
-12B	RADIANT COIL DETAILS.
-12C	CROSSOVERS/MANIFOLDS
-14A	LADDER & PLATFORM GENERAL ARRGT.

RETURNED OCT. 2 1. 1996 CHIYODA V P C

RECVD OCT. 1 1. 1996 CHIYODA VPC

CHIYODA
JOB NO.51046 IBN RUSHD AROMATICS PROJECT
PO NO. SAYPDE0002
RLQ NO. 228540009501
IDENT NO.2285400#0501DW0026
A-NO COMMENTS PROCEED WITH FABRICATION — SAY TEAM
B-PROCEED WITH FABRICATION COMMENTS TO BE CONSIDERED — PID
C-DO NOT PROCEED WITH FABRICATION — DATE 17 Oct. '96
PURCHASER'S PERMISSION TO PROCEED OR REVIEW TAKEN ON VENDOR PRINTS SHALL NOT RELIEVE VENDOR FROM ITS RESPONSIBILITIES OR LIABILITIES UNDER PURCHASE ORDER

BORN

DRAWING TITLE: GENERAL ARRANGEMENT (ELEVATIONS)
SERVICE: 51-B-06 STRIPPER REBOILER
FOR: IBN RUSHD

DRAWN:	DATE:	CHECKED:	DATE:	APPROVED:	DATE:
CT	30.1.95	M.J.D	29.2.96	R.J.C.	7.3.96

JOB No. 2881 — DRAWING NO. 2881-51B06-02A — REV. 2

REV.	BY	DATE	CHECKED	DATE	APPROVED	DATE
0.0		13.09.95	C.T.	30.9.95		4/10/96
1	RE	18.7.96	CT	27.7.96	R.C.	6.8.96

NOX. & OXYGEN ANALYSERS REPOSITIONED S.S. CONNS. REPOSITIONED REVISIONS AS INDICATED

REVISED PER CLIENT RETURN PRINT DATED 12.3.96.

FILENAME: X:\DWGS\2881\5106\02BA
SCALE: 1:75
ORIGINAL SIZE: A1

55401

CTCI CORPORATION

DRAWING NUMBER: D-6796-96-6

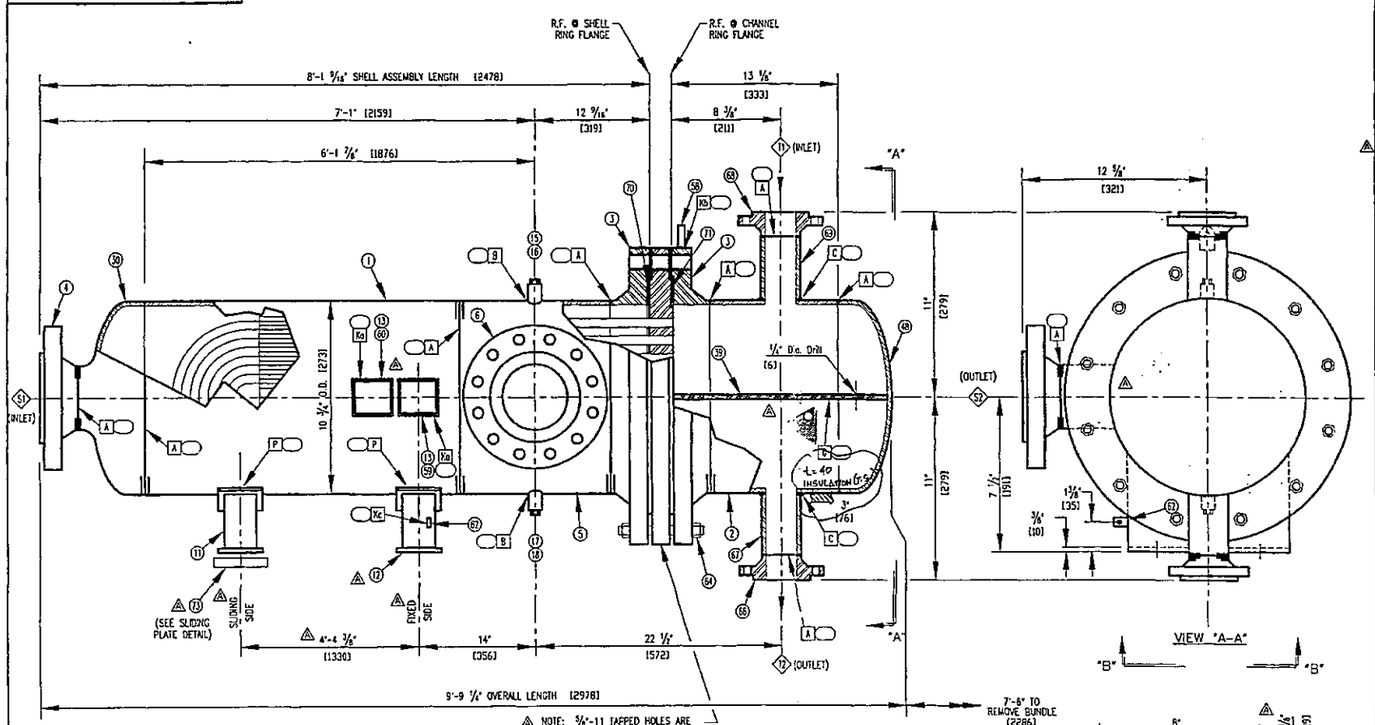

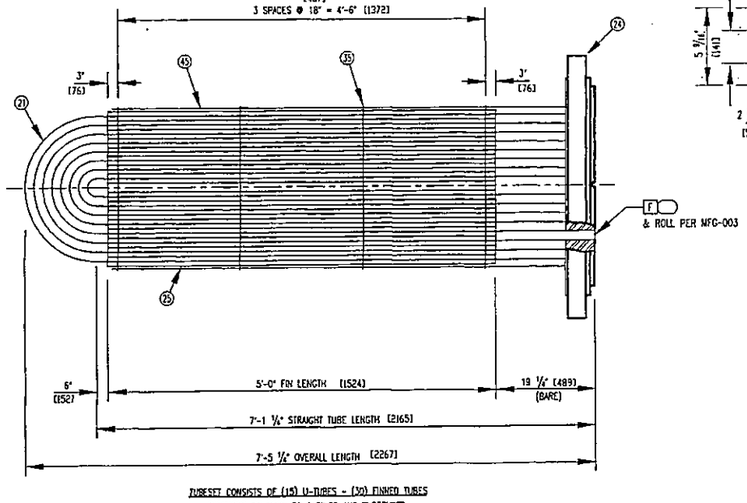

TUBESET CONSISTS OF (15) U-TUBES - (30) FINNED TUBES
TACKWELD TIE RODS TO BAFFLES AND TUBESHEET.

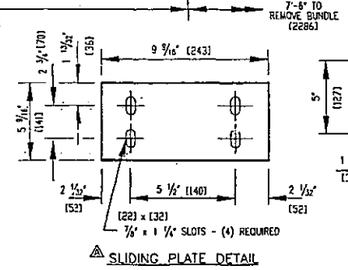

SLIDING PLATE DETAIL

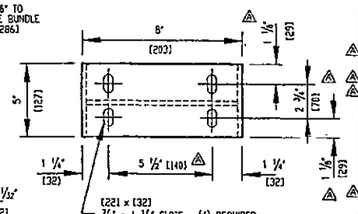

VIEW "B-B"

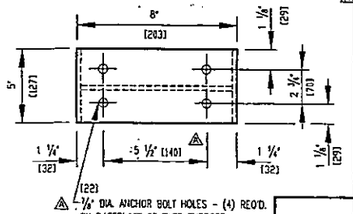

VIEW "B-B"

NOTES

1) All bolt holes to straddle center lines.
2) Item Number, Shipping Weight and Purchase Order Number to be paint stenciled on outside of shellpipe before shipment.
3) Purge exchanger with 3-5 PSI Nitrogen gas and apply metal covers, red rubber gaskets, valves and gages.
4) Strength weld tubes to tubesheets with double grooved tube holes. Liquid penetrant examine tube to tubesheet welds and 10% of attachment welds.
5) Spot radiography required (per ASME) on shellside and tubeside.
6) Ultrasonic Test all plate over 1.57" (40mm) thick per SA-435.
7) Magnetic Particle Examine C.S. corner joints per UG-93 and C.S. nozzle to shell welds & 10% of attachment welds.
8) Carbon Steel weld procedures to have Brinell Hardness of 200 BHN max.
9) After assembly and final hydrotest, sandblast all external carbon steel surfaces (including exposed fasteners) per SSPC SP10 and paint as follows:

SHELLSIDE: One (1) coat, 5 mils DFT, Amerlock 400 Epoxy Mastic Primer followed by 2 mils of Amercoat 450 HS, Polyurethane (Color: Aluminum).

TUBESIDE: One (1) coat, 3 mils DFT, DimeTcote 21-5 Inorganic Zinc Silicate followed by 1 mil DFT, Amercoat 878 Silicone (Aluminum).

NOTE: Paint/Primer subject to damage during handling & shipping. Touchup (if required) to be provided by others at jobsite.

** App. A of Spec. 22854-SP-000-D-001 and WRC-107 apply to nozzles in shells and heads, and are not applicable to tees or concentric reducers. The loads shown below are the maximum loads that can be applied to this construction.

[ ] DENOTES MILLIMETERS

SPARE PARTS

Item	DESCRIPTION	Commissg.	Startup	Operating	Spares	Price Each
70	Gasket; Shell	-	1	2	4	
71	Gasket; Channel	-	1	2	4	
64	Bolts; Closure	-	-	-	2	

Total quantity for each category as SUGGESTED by Brown Fintube Company.
Quantity shown for SPARES will be shipped with exchanger.

NOZZLE SCHEDULE

NOZ.	SIZE & RATING	
S1	8"-150# ANSI RTJWN (INLET)	**
S2	10"-150# ANSI RTJWN (OUTLET)	**
T1	3"-150# ANSI RTJWN (INLET)	
T2	1"-150# ANSI RTJWN (OUTLET)	

MAX. NOZ. LOADS

	P (N)	M. (Nm)	MC (Nm)
F	2917.7	3828.9	4976.7
M	3647.7	5984	7778
	805	517	368
MC	1135.3	44.9	1357

DESIGN CONDITIONS

SURFACE PER EXCHANGER: 182.3 SQ.FT. 16.9 SQ.M.

		SHELLSIDE	TUBESIDE
FLUID CIRCULATED		FUEL GAS	LP STEAM
DESIGN PRESSURE	PSIG/barg	160/11	80/5.5
HYDRO TEST PRESSURE	PSIG/barg	240/16.5	120/8.25
FLUID OPER. TEMP.	IN/OUT (F/C)	47/140 / 8/60	251/291 / 144/144
MIN. METAL TEMP.	F/C	49/9	49/9
MAX. METAL TEMP.	F/C	320/160	482/250
CORROSION ALLOWANCE	inches/mm	0.1181/3	0.1181/3 (Except Tubes)
EXCHANGERS IN PARALLEL		1	1
EXCHANGERS IN SERIES		1	1

51-E-32 FUEL GAS HEATER FOR 51-B-06

PURCHASE ORDER NO. SAYPOH0038 TEMA CLASS -
DATE BUILT 1996-12 RED. OR CODE ASME VIII DIV. 1
SERIAL NO. 6796-96-6 SURFACE 16.9 m²

	SHELL SIDE	TUBE SIDE
DESIGN PRESS.	11.0 bar(g)	5.5 bar(g)
DESIGN TEMP.	160 °C	250 °C
HYDRO. TEST PRESS.	16.5 bar(g)	8.3 bar(g)
PNEUM. TEST PRESS.	- bar(g)	- bar(g)
PWHT & RADIOGRAPHED	- SPOT	- SPOT
WEIGHT EMPTY	383 kg	BUNDLE 238 kg

BROWN FINTUBE COMPANY

(4) 5mm. DIA. HOLES FOR 3mm. DIA. RIVETS (S.S.)

RECOMMENDED ARRANGEMENT

RETURNED
FEB. - 5. 1997
CHIYODA VPC

BILL OF MATERIAL

BFT SERIAL NUMBER: 6796-96-6

REVISION NO.	ITEM NO.	DESCRIPTION	Pcs. per Exch.	Total pcs.	BFT Drawing No. (Proprietary - Not Incl. in Customer Dwg.)	BFT Mat'l Code	Special Mat'l Review	BFT Coat Code	MATERIAL DESCRIPTION
	1	Pipe; Shell: 10"-Sch. 40 Pipe x 5'-5 1/8" Lg. (B.B.E.)	1	1	A50040-004	0051	(2)(3)	00	SA-106-B SMLS. AW.
	2	Pipe; Channel: 10"-X-Sts. x 9" Lg. (B.B.E.)	1	1	A50040-012	0053	(3)	00	SA-106-B SMLS. AW.
	3	Flange; Ring Shell & Channel: 10"-150# ANSI Female Facing W.N. (Sch. 40)	2	2	A65040-021	0084	(1)(2)(3)	00	SA-105
	4	Flange; Shell Nozzle: 8"-150# ANSI RTJWN (Sch. 40)	1	1	A64037-021	0084	(1)(2)(3)	00	SA-105
	5	Tee; Straight: 10"-Sch. 40	1	1	X50040-004	0097	(2)(3)	00	SA-234-WPB
	6	Flange; Shell Nozzle: 10"-150# ANSI RTJWN (Sch. 40)	1	1	A64040-021	0084	(1)(2)(3)	00	SA-105
	7								
	8								
	9								
	10								
	11	Bracket; Support (Sliding)	1	1	A13963-002	1817		00	SA-36 w/ SA-516 GR. 70 Pad
	12	Bracket; Support (Fixed)	1	1	A13964-002	1817		00	SA-36 w/ SA-516 GR. 70 Pad
	13	Bracket; Nameplate	2	2	A41035-030	0000		00	A-569
	14								
	15	Coupling: 3/4"-3000# Threaded	1	1	A77031-006	0084	(2)(3)	00	SA-105
	16	Plug; Hex Head: for 3/4" 3000# Coupling	1	1	A77012-006	0084	(2)(3)	00	SA-105
	17	Coupling: 1"-3000# Threaded	1	1	A77031-008	0084	(2)(3)	00	SA-105
	18	Plug; Hex Head: for 1" 3000# Coupling	1	1	A77012-008	0084	(2)(3)	00	SA-105
	19								
	20								
	21	Set; Tube: 3/4" O.D. x 14 BWG, MW. / Dwg.	1	1	85-6796-96-6	0078	(3)	00	SA-214 ERW. MW.
	22								
	23								
	24	Tubesheet:	1	1	A30918-000	0018	(1)(2)(3)	00	SA-516 GR. 70 (U.T.)
	25	Fin Channel: 3/8" High x 0.035" Thk. x 5'-0" Lg. (16 Fin/Tube)	240	240	A46082-035*	0001		00	C1010, C1015 - C.S. Weldable
	26								
	27								
	28								
	29								
	30	Reducer; Concentric: 10" x 8" Sch. 40	1	1	A57124-004	0092	(2)(3)	00	SA-234-WPB
	31								
	32								
	33								
	34								
	35	Bolile; Peripheral	4	4	A39018-000	0000		00	A-569
	36								
	37								
	38								
	39	Plate; Pass Partition: 3/8" Thk. x 9 5/8" Wide x 20" Lg.	1	1	-	0018		00	SA-516 GR. 70
	40								
	41								
	42								
	43								
	44								
	45	Tie Rods: 3/8" Dia. x 6'-3"	4	4	A46006-000	0004		00	SA-36
	46								
	47								
	48	Cap; Pipe: 10"-Sch. 40	1	1	A50040-004	0097	(3)	00	SA-234-WPB
	49								
	50								
	51								
	52								
	53	Flange; Cover Purge: 8"-150# ANSI Flg. (Hole)	1	1	A35579-013	0004		00	SA-36
	54	Flange; Cover Purge: 10"-150# ANSI Flg. (Threaded)	1	1	A35510-014	0004		00	SA-36
	55	Flange; Cover Purge: 3"-150# ANSI Flg. (Hole)	1	1	A35579-008	0004		00	SA-36
	56	Flange; Cover Purge: 1"-150# ANSI Flg. (Threaded)	1	1	A35510-003	0004		00	SA-36
	57								
	58	Lug; Lifting: w/1 3/4" (32) Dia. Hole	1	1	A40119-000	0018		00	SA-516 GR. 70
	59	Nameplate; Imperial: w/ (4) Rivets	1	1	A99000-000	0401		00	SA-240 304
	60	Nameplate; Customer: w/(4) Rivets	1	1	A99019-066	0401		00	SA-240 304
	61								
	62	Lug; Grounding: w/ 3/8" (22) Dia. Hole	1	1	A40237-000	0154		00	304 S.S.
	63								
	64	Bolts, Closure: 7/8"-9NC x 6 1/4" Lg. w/(12) Hex Nuts	12	12	A45014-025	0268		00	SA-193 B7 & SA-194-2H
	65								
	66	Flange; Tube Nozzle: 1"-150# ANSI RTJWN (Sch. 160)	1	1	A64001-081	0084	(1)(3)	00	SA-105
	67	Neck, Tube Nozzle: 1"-Sch. 160 Pipe x 4 1/2" Lg.	1	1	A50001-010	0053	(3)	00	SA-106-B SMLS. AW.
	68	Flange; Tube Nozzle: 3"-150# ANSI RTJWN (Sch. 160)	1	1	A64012-081	0084	(1)(3)	00	SA-105
	69	Neck, Tube Nozzle, 3"-Sch. 160 Pipe x 4 1/4" Lg.	1	1	A50012-010	0053	(3)	00	SA-106-B SMLS. AW.
	70	Gasket; Shell	1	1	B23009-031	0707		00	C.S. O.J. NON-ASB.
	71	Gasket; Channel	1	1	B23010-111	0707		00	C.S. O.J. NON-ASB.
	72								
	73	Plate; Sliding: 5 7/16" Wide x 9 9/16" Lg. x 1/4" Thk.	1	1	-	0018		00	SA-516 GR. 70
	74								
		+ Fin Channel (200 fins) (1.4-131) total lbs							

MAT'L. HEAT NUMBERS

U W RT-3

NAT'L. BD. NO. NO

CERTIFIED BY: BROWN FINTUBE COMPANY

SHELL 160 PSIG AT 320 °F MAX. A.W.P.
49 °F AT 160 PSIG MIN. DESIGN METAL TEMP.
TUBE 80 PSIG AT 482 °F MAX. A.W.P.
49 °F AT 80 PSIG MIN. DESIGN METAL TEMP.

SER. NO. 6796-96-6
YEAR BUILT 1996
USER ARABIAN INDUSTRIAL FIBERS CO., LTD.
ITEM 51-E-32 P.O. SAYPOH0038
SURFACE: 182.3 SQ.FT.

Brown Fintube Company
HOUSTON, TEXAS

ASME Stamped

CHIYODA corporation
JOB NO. 51045 IBN RUSHD AROMATICS PROJECT
PO NO. SAYPOH0038
REQ NO. MR-CD-E-0008
IDENT NO. 51-E-32-DW 0001

A-NO COMMENTS	SPT TEAM	
B-PROCEED WITH FABRICATION	VSL	
C-PROCEED WITH FABRICATION COMMENTS TO BE CONSIDERED		
D-DO NOT PROCEED WITH FABRICATION	DATE	30 JAN 97

PURCHASER'S PERMISSION TO PROCEED OR REVIEW TAKEN ON VENDOR DRAWS SHALL NOT RELIEVE VENDOR FROM ITS RESPONSIBILITIES OR LIABILITIES UNDER PURCHASE ORDER

RECVD
JAN 13, 1997
CHIYODA VPC

SPECIAL MATERIAL NOTES

1. 125-250 Ra gasket surface finish required.
2. To be "KILLED" Carbon Steel
3. Maximum Carbon Content to be 0.25 % for Carbon and Carbon Manganese pressure components.

CONSTRUCTION	ESTIMATED WT.
CODE: ASME VIII, Div. 1 1995	TOTAL SHIPPING WT.: 845 LBS. 383 KG.
OTHER:	FULL OF WATER/EXCH. 1015 LBS. 460 KG.
INSPECTION	DRY/EXCHANGER 845 LBS. 383 KG.
CODE: Yes	TUBE ASSY./EXCH. 562 LBS. 268 KG.
BFT: Yes	
OTHER: No	
MAT'L BD.: No	
CUSTOMER: Yes	

Mark	Date	Revision Description	By	Chk.
A				
B				
C				
D				
E	12-31-96	Revised shellside paint color	AMK	KJS
F	10-28-96	Revised per customer comments	AMK	KJS

FINAL
BROWN FINTUBE CO

BROWN FINTUBE

BROWN FINTUBE CO.
A KOCH ENGINEERING COMPANY
P.O. BOX 40082
12602 FM 529
HOUSTON, TEXAS, USA 77041
PH. NO.: (713) 466-3535
FAX. NO.: (713) 466-3701

Customer: CHIYODA INTERNATIONAL CORPORATION
P.O. No.: SAYPOH0038 Item No.: 51-E-32
BFT Contract No.: 6796H-96 No. of Exchangers This Dwg.: 1
Project Title: -
Project Location: YANBU, SAUDI ARABIA
Customer Job No.: - O & I Bulletin No.: 1200/3
Service: FUEL GAS HEATER FOR 51-B-06
Model Number: LBEV-1005
Date: 8-13-96 Drawn By: RES Checked By: JP

Drawing Number: D- 6796-96-6 Rev. B

A	SINGLE "V" BUTTWELD	5/32" 75°	WPS NO.: 101/402/522	
B	CPLG. TO SHELL/NOZZLE "SET-IN"	3/8"	WPS NO.: 101/402	
C	SHELL TO NOZZLE "SET-ON"	3/8" 1/8"	WPS NO.: 101/402	
F	TUBE TO TUBESHEET		WPS NO.: 102	
G	DOUBLE FILLET	3/8"	WPS NO.: 402	
Ka	FILLET WELD	7/16"	WPS NO.: 402	
Kb	FILLET WELD	7/16"	WPS NO.: 402	
Kc	FILLET WELD	3/8"	WPS NO.: 359	
P	SUPPORT BRACKET TO SHELL DOUBLE FILLET	3/16"	WPS NO.: 402	

6796000604

Scanned

DE-10 1/2

044168

554401

سابك
sabic

ARABIAN INDUSTRIAL FIBERS COMPANY

IR-II AROMATICS PROJECT

PROJECT NO. 10E0541A01

DOCUMENT TITLE:

REFORMATE SPLITTER DATA SHEET

DOCUMENT NO:

DS-56-CA-502

REV	DESCRIPTION	BY	CHK.	APPR.	DATE
2	Issued for Design	LSH	SYL	YSL	31-Mar-2011
1	Revised as Marked	LSH	SYL	YSL	11-Mar-11
0	Issue For Approval	LSH	SYL	YSL	1-Feb-11

ابن رشد
ibn rushd

ARABIAN INDUSTRIAL FIBERS COMPANY YANBU, KINGDOM OF SAUDI ARABIA

CTCI CORPORATION

CERTIFIED

PROJ. MGR S P L for DATE 3/31'11

CLIENT _____ DATE _____

PAGE 1 OF 2

XC32A-56-502

GN-502 84.10

CONTENTS

Attachment total 1 page.

ابن رشد ibn rushd FLUOR	**VERTICAL VESSEL DATASHEET**	**Contract:** 10E0541A01 **Equip. No.:** 56-C-02 **Revision:** 2 **Date:** 31-Mar.-2011 **Unit:** 56 - Sulfolane **PO No.:** **Document No.:** DS-56-CA-502 **Sheet:** 1 of 2	سابك sabic CTCI CORPORATION

Client:	Arabian Industrial Fibers Company	**Plant:**	Sulfolane
Service:	Reformate Splitter	**Site:**	Yanbu, Kingdom of Saudi Arabia

DESIGN SKETCH

VESSEL DIMENSIONS: ID: 4572 / 7925 mm T/T: 32800 mm

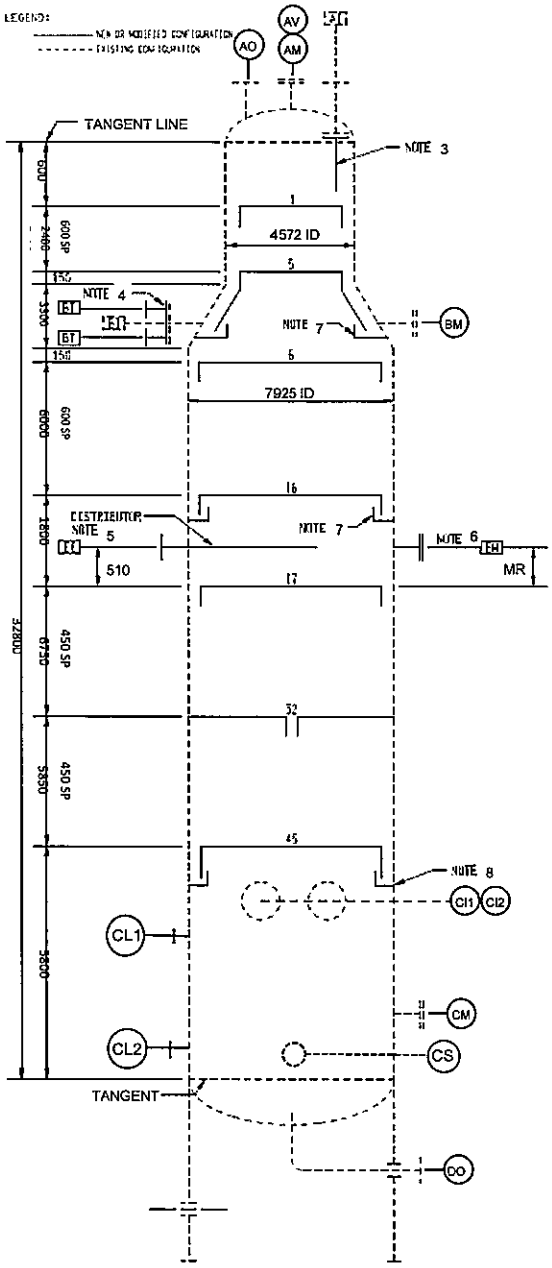

DESIGN CONDITIONS

Pressure:	3.5 (Note 1) bar(g)	at	245	°C
Vacuum:	FV (Note 15) bar(g)	at	215	°C
Min. Metal Temp:	9 (Note 25) °C	at	MAWP	bar(g)
Liquid Level:	Note 16			mm
Specific Gravity of Liquid:	0.700	at	204	°C

OPERATING CONDITIONS

Pressure:	Note 23 bar(g)	at	Note 17	°C
Vacuum:	bar(g)	at		°C
Low Temperature:	°C	at		°C
Hydrogen Partial Press.	0 bar(a)	at		°C

INTERNALS & INSULATION

DESCRIPTION	Bulk Density kg/m³	Liquid Holdup vol%	Pressure Drop bar
Packing:			
Catalyst:			
Mist Eliminator:			
Insulation	40 / 50 mm Hot ■	Cold ☐	
Fire Proofing	76 mm Yes ■	No ☐	

CONSTRUCTION

	Materials	Corrosion Allowance
Shell:	SA-516-65	3 mm
Heads	SA-516-65	3 mm
Support	SA-516-65 / SA-283-C	1.6 mm

SPECIAL CONDITIONS

Stress Relieve (Process Reason Only):	Yes ☐	No ■
Vessel in Wet Sour Service:	Yes ☐	No ■
Steamout Required:	Yes ■	No ☐

DESIGN SKETCH (CONTINUED)

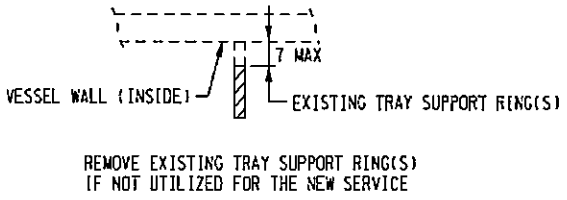

WEIGHTS ARE BASED ON THE VENDOR CERTIFIED DRAWING No. 6T067-0501 REV 4 (1999)

	(kg)
EMPTY	531 900
OPERATING	799 200
FULL OF WATER	2 067 800

THICKNESS ARE BASED ON THE VENDOR CERTIFIED DRAWING No. 6T067-0501 REV 4 (1999)

	(mm)
TOP HEAD	25.1 min.
SHELL	26-47
BTM HEAD	43.3 min.
SKIRT	18

ابن رشد ibn rushd FLUOR	VERTICAL VESSEL DATA SHEET	Contract: 10E0541A01 Equip. No.: 56-C-02 Revision : 2 Date : 31-Mar.-2011 Unit : 56 - Sulfolane P.O. No. : Document No.: DS-56-CA-502 Sheet : 2 of 2	سابك sabic CTCI CORPORATION	REV

NOZZLE SCHEDULE

TAG	QTY	SIZE in	PRESSURE RATING	DESCRIPTION
AI	1	10	300# RFWN	REFLUX
AM	1	24	300# RFWN	MANWAY
AO	1	30	300# RFWN	VAPOR OUTLET
AV	1	4	300# RFFN	VENT
BI	1	30	300# RFWN	BLANKOFF (NOTES 4, 22)
BM	1	48	300# RFWN	MANWAY W / DAVIT
CI1/2	2	36	300# RFWN	REB RETURN
CL1/2	2	2	300# RFWN	LEVEL
CM	1	24	300# RFWN	MANWAY W / DAVIT
CS	1	4	300# RFWN	STEAMOUT (Note 26)
DO	1	36	300# RFWN	BTMS OUTLET
BT1/2	2	1	300# RFLWN	TI-TIC (NEW, NOTE 4)
EI	1	10	150# RFWN	INLET FEED (NEW, NOTES 5, 21)
EM	1	24	150# RFWN	MANWAY W / DAVIT (NEW, NOTES 6, 21)

NOTES:

1) This vessel tag number 56-C-02 is an existing vessel (formerly Cyclar Splitter Item No. 51-C-02), to be re-rated based on new design conditions. Modifications required for the new service are as follows:
2) Remove all existing trays and internals. Install new trays #1-5 and #6-45 as shown. See data sheet DS-56-CA-502T.
3) For existing 10-inch Nozzle "AI" replace existing distributor with new 8-inch distributor per U.O.P. Std. DWG. 3-148.
4) For existing 30-inch nozzle "BI" remove existing internal distributor. CTCI to provide blank-off flange with two (2) installed 1-inch TI-TIC nozzles "BT", as shown, above tray #6.
5) Install new Feed Nozzle "EI" above tray #17 with new distributor per U.O.P. STD DWG 3-150, as shown.
6) Install new Manway Nozzle "EM" above tray #17, as shown.
7) Install new traps below new trays #5 and #16. Traps to be provided by tray supplier.
8) Install new traps below new tray #45, as shown, per U.O.P. STD DWG 3-280.
9) Dimensions are in millimeter unless otherwise noted.
10) Vessel heads are 2:1 Elliptical.
11) For existing vessel details and nozzle elevation and orientation refer to vendor (Hyundai Heavy Industries Co. Ltd.) certified drawing No. 6T067-0501 REV 4 (1996).
12) CTCI to verify the available thickness after evaluating maintenance records and performing UT testing and confirm. CTCI to provide necessary ASME code documentation for the repair "R" stamp and new nameplate.
13) CTCI to verify that the structural and mechanical condition of the existing vessel, support, and foundation are satisfactory for continuing operation at the revamp design conditions and under current applicable codes and specifications.
14) CTCI to verify existing dimensions in the field.
15) Existing vessel is not designed for external pressure. CTCI to determine the need to add vacuum stiffening rings, and design them as required to meet the new Full Vacuum design condition.
16) Normal liquid level (NLL) is 1750 mm above bottom tangent line. HLL = 2664 mm LLL = 836 mm. 2
17) Operating Temperature. Top: 125°C. Bottom: 215°C.
18) Total vessel pressure differential = 0.42 bar.
19) Applicable specifications: SP-000-AA-5002, 22854-SP-000-A-003, 22854-SP-000-A-004, 22854-SP-000-D-001, 22854-SP-000-W-001, 22854-SP-000-W-002, 22854-SP-000-W-003, P01-E07, T01-S01, 3-11.
20) The following UOP standard drawings are applicable: 3-148, 3-150, and 3-280.
21) CTCI to design and furnish new ladder(s) and platform(s) for access to new nozzle "EI" and manway "EM".
22) CTCI to restore handrail on platform below nozzle "BI" after demolition of existing piping.
23) Operating pressure : Top : 1.71 bar(g) Bottom : 2.17 bar(g).
24) Nozzles must not be located in downcomers.
25) The Min. Design Ambient Temperature should be 6℃.
26) Steamout at 150 (232 max.) ℃ and 3.5 (4.1 max.) bar (g)

55189

FOR RECORD

CHIYODA CORPORATION

CLIENT : IBN RUSHD			REVISIONS			
PROJECT PTA & AROMATICS -	MARK		1	2	3	4
TITLE : AROMATICS	APRD					
JOB NO. : 51046	CHKD					
DOC. NO. : D5-51-C-002 (1/1)	MADE	K. Fukushima	K. Fukushima			
	DATE	Mar. 22 '96	Jan. 2 '97			

uop

25 East Alpenquin Road • PO Box 5017 • Des Plaines, Illinois 60017-5017 • U.S.A.

PROJECT SPECIFICATION 560689 - 301 - 0 SHEET 4

REV	DATE	BY	APP'D	REV	DATE	BY	APP'D
0	5-26-95						

VESSELS

SERVICE (CYCLAR) STRIPPER

ITEM NO ~~C-5702~~ 51-C-02

Design Conditions at Top	INT 10.8 BAR (g)	@343°C
	EXT	@ °C
	Metal Temperature (Min)	9°C
Operating Conditions	TOP	115°C
	BOTTOM	222°C
Radiograph		HR
Postweld Heat Treat		HR
Joint Efficiency		HR %

Material Specifications

Heads	SA516-65
Shell	SA516-65

Shell	Thickness Required by Code-in.	Corrosion Allowance in. (Min)
		3

Heads		
		3

Vessel Heads

Top Head	2:1 ELLIPTICAL
Bottom Head	2:1 ELLIPTICAL

Accessories Applied by Fabricator

Ladder & Platform Clips	AS REQUIRED (*)
Insulation Clips & Rings	YES
Vessel Support	YES

Nozzles and Manways

Mark	No	Size Inches	Service
AI	1	10	REFLUX
AM	1	24	MANWAY
AO	1	30	VAPOR OUTLET (+)
AV	1	4	VENT
BI	1	30	INLET-FEED (+)
BM	1	48	MANWAY (+)
CI	2	36	REB RETURN (+)
CL	2	2	LEVEL
CM	1	24	MANWAY
CS	1	4	STEAMOUT
DO	1	36	BTMS-OUT (+)

Class - ANSI CL300 (+) SHEET 2-NOTE A

Facing - RAISED FACE

Normal Liquid Level = 1750 MM ABOVE BOTTOM TANGENT

Specific Gravity = 0.670

Delta-P Trays (Total) = 0.35 BAR

NOZZLES MUST NOT BE LOCATED IN DOWNCOMERS

(*) BY CONTRACTOR

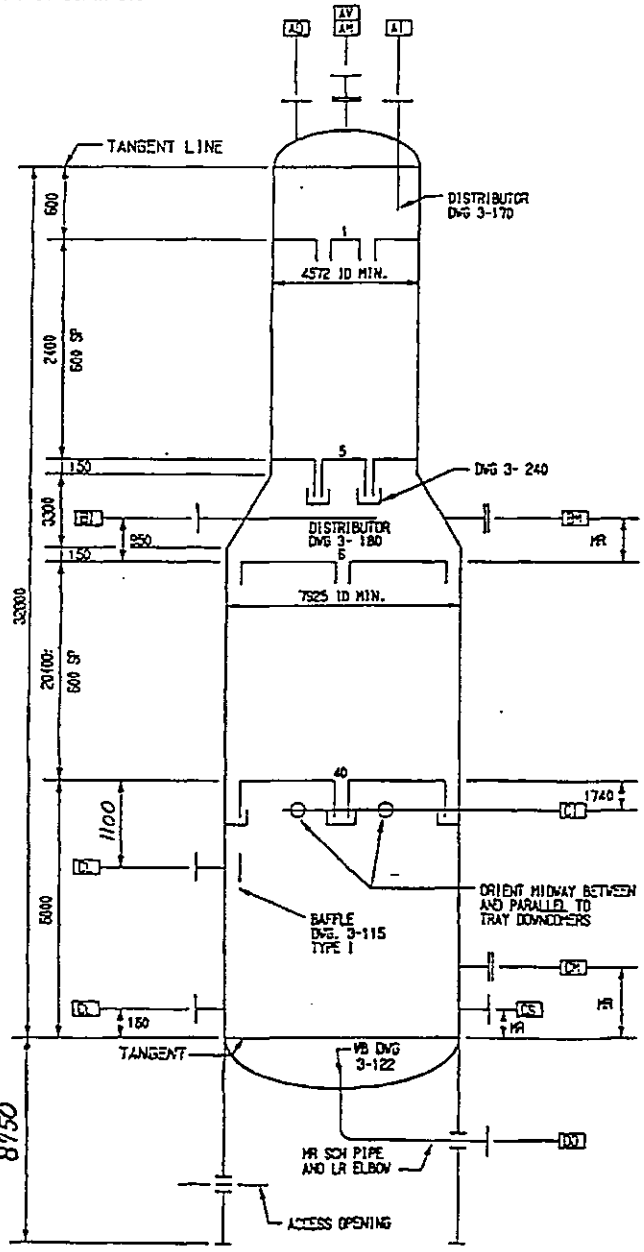

Drawings Referred to in this Specification

3-115-2	3-122-0	3-170-2	3-180-1	3-240-2	

NOTE - These data are confidential and the property of UOP and shall not be disclosed to others or reproduced in any manner or used for any purpose whatsoever except by written permission or as provided in a signed agreement with UOP relating to such data.

52

22

2?

509104 (571)

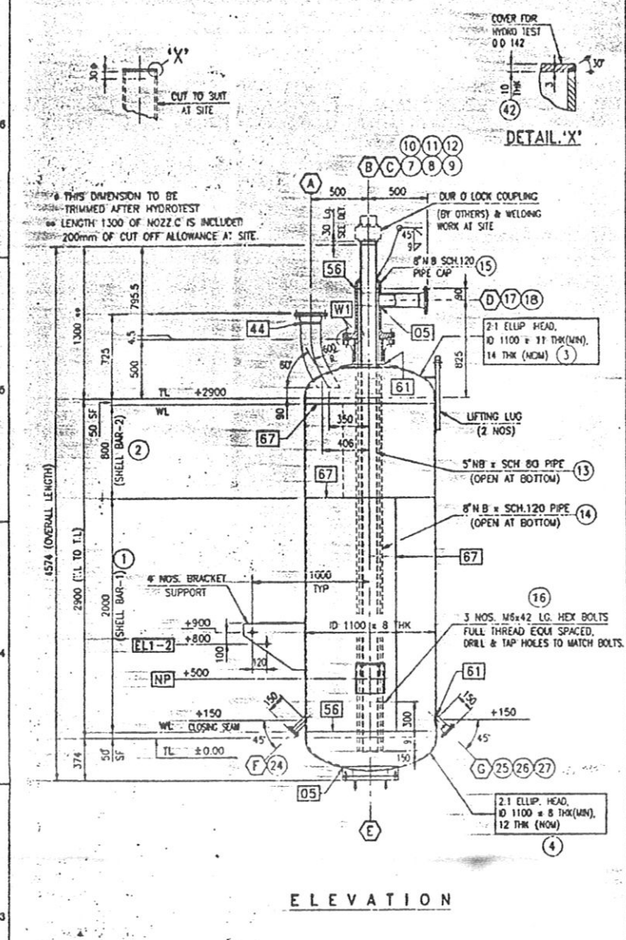

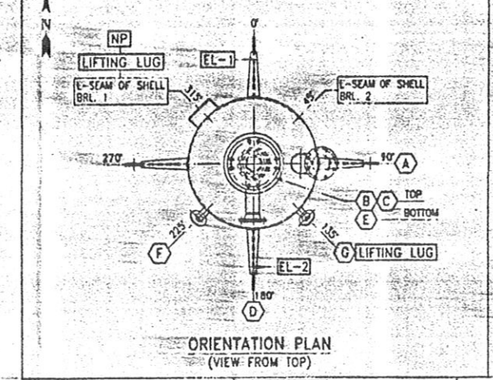

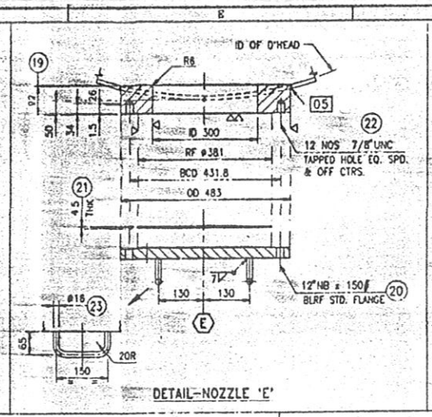

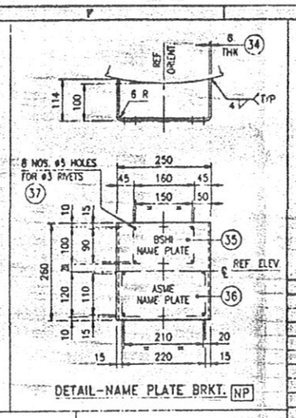

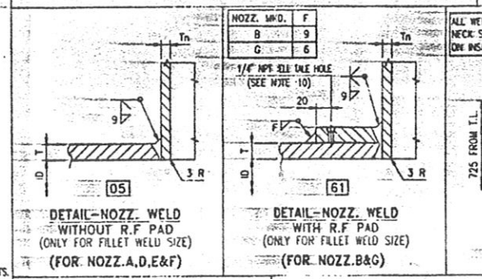

NOZZ. MKD.	F
B	9
G	6

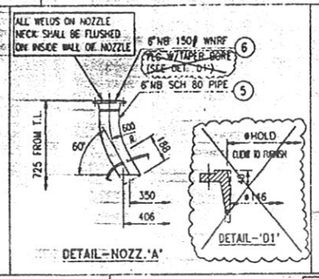

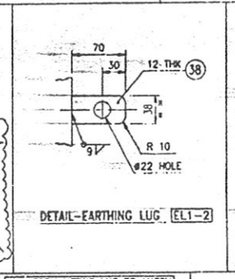

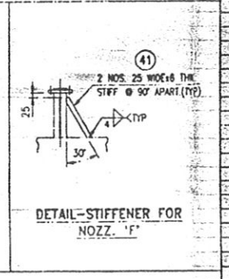

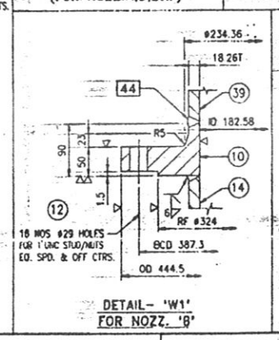

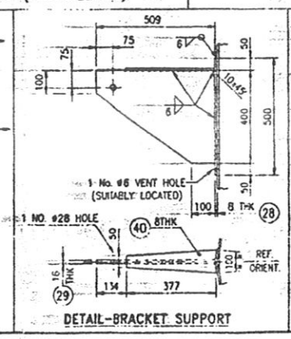

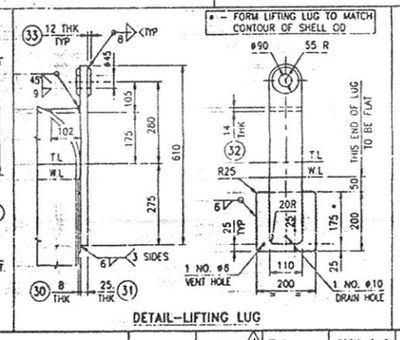

* 4.5mm THK SS 318 SPIRAL WOUND GRAPHITE FILLED WITH SS 316 INNER AND SS/CS OUTER CENTERING RING.

TOTAL WT. = 1927.4 Kgs.

ITEM POS.	QTY FOR ONE FAM.	DESCRIPTION	LENGTH	WIDTH	THICK	WT. IN Kg. For ONE POS.	WT. IN Kg. For ONE FAM.	MAT'L	MAT'L CODE	ROA. NO.
42	1	COVER PL. ø142	0	0	10.0	1.3	1.3	A36		
41	2	STIFF (CUT TO SUIT)	0	0	8.0	0.2	0.4	SA516Gr70	R06045172500800	STOCK
40	4	SUPP PLATE	377	100	8.0	2.4	9.6	SA516Gr 70	703SA01L28	703300-001
39	1	PI 8" 120-C	321	0	0.0	20.8	20.8	SA106GrB	63380607102	STOCK
38	2	EARTHING LUG	70	38	12.0	0.3	0.6	SS304	2077A16L01	STOCK
37	8	RIVET ø3	15	0	0.0	0.0	0.0	COPPER	703SA21B01	703300-021
36	1	ASME NAME PLATE	220	120	3.0	0.6	0.6	SS304	000100050122	STOCK
35	1	BSHI NAME PLATE	160	100	3.0	0.4	0.4	SS304	000100050122	STOCK
34	1	NAME PLATE BRKT.	470	260	6.0	5.8	5.8	SA516Gr70	R06045172500800	STOCK
33	4	PLATE 90/45/127	0	0	0.0	0.5	2.0	SA36	703SA01L58	703300-001
32	2	PLATE	110	182	14.0	1.2	2.4	SA516Gr70	703SA01L37	703300-001
31	2	LIFTING LUG PLATE	610	110	25.0	13.2	26.4	SA36	703SA01L64	703300-001
30	2	PAD	200	200	8.0	2.5	5.0	SA516Gr70	703SA01L29	703300-001
29	4	PLATE	509	400	18.0	25.6	102.4	SA203GrD/SA36	703SA01L61	703300-001
28	4	PAD PLATE	500	100	8.0	3.1	12.4	SA516Gr70	703SA01L28	703300-001
27	1	F2"150#WNRF150-G	0	0	0.0	2.8	2.8	SA105	703SA04F39	703300-004
26	1	PI 2" 160-C	127	0	0.0	1.4	1.4	SA106GrB	703SA06I01	703300-006
25	1	RP 150/70/BT-G	0	0	0.0	0.8	0.8	SA516Gr70	703SA01L28	703300-001
24	1	F 1" 150# WNRF-F	178	0	0.0	2.6	2.6	SA105	703SA04F28	703300-004
23	2	HANDLE ø16-E	283	0	0.0	0.4	0.8	SA36	703SA20P01	703300-020
22	16	ST/1NF 7/8"UNC-E	100	0	0.0	0.6	9.6	SA193B7/SA194GR	703SA11B08	703300-011
21	4	CK 12"150/RF-E	0	0	4.5	0.0	0.0	*	703SA12C10	703300-012
20	1	BF 12"150/RF-E	0	0	0.0	50.0	50.0	SA105	703SA04F70	703300-004
19	1	FORGING(SEE DWG)-E	0	0	0.0	81.3	81.3	SA105	703SA04F77	703300-004
18	1	F4"150#WNRF120-D	0	0	0.0	6.8	6.8	SA105	703SA04F87	703300-004
17	1	PI 4" 120-D	353	0	0.0	7.8	7.8	SA106GrB	703SA06I03	703300-006
16	3	BT M6 (FULL THREAD)	42	0	0.0	0.0	0.0	SA193B7		
15	1	CAP 8" 120-C	0	0	0.0	7.6	7.6	SA234WPB	703SA09C19	703300-009
14	1	PI 8" 120-C	3521	0	0.0	318.4	318.4	SA106GrB	63380607102	STOCK
13	1	PI 5" 80-C	4355	0	0.0	134.9	134.9	SA106GrB	703SA06I14	703300-006
12	20	ST/2NT 1" UNC-B	160	0	0.0	1.0	20.0	SA193B7/SA194GR	703SA11B09	703300-011
11	4	CK 10" 300/RF-B	0	0	4.5	0.0	0.0	*	703SA12C11	703300-012
10	1	F10"(SEE DWG)-B	0	0	0.0	56.0	56.0	SA105	703SA04F104	703300-004
9	1	F10"300/RNRF80-B	0	0	0.0	40.9	40.9	SA105	703SA04F54	703300-004
8	1	PI 10" 80-B	118	0	0.0	11.3	11.3	SA106GrB	703SA06I08	703300-006
7	1	RP 510/283/131-B	0	0	0.0	14.4	14.4	SA516Gr70	703SA01L33	703300-001
6	1	F6"150#WNRF80-A	0	0	0.0	10.8	10.8	SA105	703SA04F47	703300-004
5	1	PI 6" 80-A	628	0	0.0	24.7	24.7	SA106GrB	703SA06I05	703300-006
4	1	EH ID1100x12T(NOM)	0	0	0.0	148.3	148.3	SA516Gr70	703SA01L32	703300-001
3	1	EH ID1100x14T(NOM)	0	0	0.0	174.0	174.0	SA516Gr70	703SA01L37	703300-001
2	1	SHELL BRL-2	3481	800	8.0	174.9	174.9	SA516Gr70	703SA01L28	703300-001
1	1	SHELL BRL-1	3481	800	8.0	437.2	437.2	SA516Gr70	703SA01L28	703300-001

LIST OF MATERIAL

TOP HEAD	STRESS RELIEVING	610 ± 10°C	205°C / HR ABOVE 427°C	60 Minutes	260°C / HR UPTO 427°C	AS PER BELLELI STD. PROCEDURE PR-HTT-101
Part	Procedure	Holding Temp °c	Heating rate °c/h	Holding time min	Cooling rate °c/h	Temperature measured furnace/part Qty of Sensors

HEAT TREATMENT

No	DESIGN CONDITIONS	UNITS	VALUES
33.	FABRICATION WEIGHT	Kg	1900
32.	FULL OF WATER WEIGHT	Kg	6300
31.	OPERATING WEIGHT	Kg	5500
30.	ERECTION WEIGHT	Kg	2000
29.	MANUFACTURER'S SERIAL No.	---	2374
28.	MANUFACTURER'S JOB NUMBER	---	7034-08
27.	MANUFACTURER'S NAME	---	BELLELI SAUDI HEAVY IND. LTD.
26.	CODE STAMP	---	YES
25.	DESIGN CODE	---	ASME SEC VIII DIV.1 1995 EDITION
24.	SERVICE	---	LIFT ENGAGER NO. 2
23.	VOLUME	m^3	3.11
22.	FIREPROOFING	mm	NO
21.	INSULATION	mm	NO
20.	SPECIFIC GRAVITY	---	-
19.	OPERATING FLUID	---	NITROGEN&CATALYST
18.	INSPECTION AUTHORITY	---	CLIENT/AHS
17.	WIND SPEED/EXPOSURE CATEGORY	km/hr	125/C
16.	EARTHQUAKE DESIGN	---	ASCE 7-88 ZONE 1
15.	MINIMUM DESIGN METAL TEMPERATURE	°C	9
14.	CHARPY IMPACT TEST	---	NO
13.	ULTRASONIC EXAMINATION	---	NO
12.	POST WELD HEAT TREATMENT	---	NO
11.	JOINT EFFICIENCY (SHELL/HEAD)	%	85/100
10.	RADIOGRAPHY (SHELL/HEAD)	---	R14 AS PER UG 116(e) (SEE NOTE-13)
9.	CORROSION ALLOWANCE	mm	3.0
8.	M.A.W.P. AT DESIGN TEMPERATURE	barG	8.84 (LIMITED BY SHELL)
7.	M.A.P. (NEW & COLD)	barG	14.72 (LIMITED BY SHELL)
6.	FIELD HYDROTEST PRESSURE (CORRODED)	barG	13.26
5.	SHOP HYDROTEST PRESSURE (HOR)	barG	22.08 (TOP)
4.	OPERATING PRESSURE	°C	18
3.	OPERATING PRESSURE	barG	-
2.	DESIGN TEMPERATURE	°C	260
1.	DESIGN PRESSURE	barG	3.5

DESIGN DATA

MARK	QTY	SIZE	PROJ FROM Q	SERVICE	O.D.	SCH	THK	TYPE	RATING (B	O.D.	THK
G	1	2"	SEE DRG	DRAIN	60.3	160	8.74	WNRF	150#	150	8
F	1	1"	SEE DRG	SAMPLE	50.8	-	12.7	LWNRF	150#	-	-
E	1	12"	SEE DRG	CLEANOUT W/BF	PAD TYPE (SEE DWG)				150#	-	-
D	1	4"	SEE DRG	GAS INLET	114.3	120	11.13	WNRF	150#	-	-
C	1	5"	SEE DRG	LIFT PIPE	141.3	80	9.53	-	-	-	-
B	1	10"	SEE DRG	OUTLET W/BF	273.1	80	15.09	WNRF	300#	510	13
A	1	6"	SEE DRG	CATALYST INLET	168.3	80	10.97	WNRF	150#	-	-

NOZZLE SCHEDULE

BELLELI REFERENCE DRAWINGS

DA-7034-08-002	FORMED HEAD - TOP
DA-7034-08-003	FORMED HEAD - BOTTOM
DA-7034-08-004	BSHI NAME PLATE
DA-7034-08-005	ASME NAME PLATE
ST-7034-08-001	FINISH REQUIREMENTS

DRAWING No.	DESCRIPTION
CHIYODA STD. DR-50-08-012	NAME PLATE
CHIYODA STD. DR-50-08-011	FLANGED NOZZLE
CHIYODA STD. DR-50-08-006	LIFTING LUG FOR VERTICAL VESSEL
CHIYODA STD. DR-50-08-005	BRACKET FOR VERTICAL VESSEL
UOP STD SPEC 3-11	PRESSURE VESSELS CARBON STEEL
BECHTEL SP. 27054-SP-000-M-001	BASIC CIVIL ENGINEERING DESIGN DATA
BECHTEL SP. 27054 SP-000-B-001	UNFIRED PRESSURE VESSELS
BECHTEL SP. 27054-SP-000-M-001	MATERIAL,WELDING,NDE & CORROSION CONTROL
LDS-52-0-003	CLIENT'S DATA SHEET

CLIENT'S REF. DWGS. & SPECS.

GENERAL NOTES

12. HEAD SEAMS SHALL BE FULLY RADIOGRAPHED,HEAD TO SHELL SEAMS SHALL BE SPOT RADIOGRAPHED PER UW-11(a)5(b) OTHER SEAMS SHALL BE SPOT RADIOGRAPHED PER UW-11(b).
18. FOR CARBON AND CARBON MANGANESE STEEL THE CARBON CONTENT SHALL BE LIMITED TO 0.25% MAXIMUM
17. THE LONGITUDINAL BUTT WELD OF NOZZLES FABRICATED FROM PLATE SHALL BE 100% RADIOGRAPHED
16. ☐ MARK INDICATES THE BSHI WELD STANDARD NUMBER.
○ MARK INDICATES THE POSITION NUMBER WITH REFERENCE TO LIST OF MATERIAL
○ MARK INDICATES THE NOZZLE MARK NUMBER.
15. SHOP HYD. TEST GASKETS :- (i) BLINDED NOZZLES WILL HAVE JOB GASKETS.
(ii) ALL OTHER NOZZLES WILL HAVE CAF GASKET.
14. SPARE PARTS:-

ITEMS	COMMISSIONING/STARTUP	OPERATIONAL	SHOP HYD. TEST
GASKETS	200%	100%	100%
FASTENERS	10%(MIN. 2 SETS)	10%(MIN 2 SETS)	NOT REQUIRED

QTY. OF SPARES FOR GASKETS AND FASTENERS ARE INCLUDED IN LIST OF MATERIALS.
13. ALL BOLTS & NUTS SHALL BE OF UNC SERIES UPTO & INCLUDING 1" SIZE & 8UN ABOVE 1" SIZE.
12. FLANGES UPTO & INCLUDING 24"NB SHALL BE AS PER ANSI B16.5 & THE FLANGE FACE FINISH SHALL BE 3.2 TO 6.3 MICROMETER.
11. MINIMUM TEMPERATURE OF HYDROTEST WATER SHALL BE 17C AND THE TEST PRESSURE SHALL BE HELD FOR HALF AN HOUR PER INCH OF THICKNESS WITH ONE HOUR MINIMUM
10. EACH REINFORCING PAD OR SEGMENT THEREOF SHALL BE PROVIDED WITH ONE No (TWO Nos FOR NOZZLES 16"NB AND ABOVE @ 180° APART) 1/4" NPT, TELL TALE HOLE AS PER ANSI B1.20.1. ALL R.F PAD WELDS SHALL BE TESTED TO 15 Psig. MINIMUM WITH AIR & SOAPY BUBBLE TEST
9. A PERMANENT REFERENCE WORKLINE FOR VERTICAL VESSELS BOTTOM TAN LINE SHALL BE PUNCHMARKED AROUND THE VESSEL PERIMETER AT 0,90,180 & 270° AND HORIZONTAL VESSELS, CENTER LEVEL SHALL BE PUNCHMARKED ON BOTH SIDE SURFACES OF SHELL NEAR THE HEAD
8. THE VESSEL SHALL BE THOROUGHLY CLEANED INSIDE & OUTSIDE AND SHALL BE FREE OF ALL DIRT, WELD ROD STUBS & LOUSE FOREIGN MATERIALS ETC.
7. ALL REMOVABLE INTERNALS SHALL PASS THROUGH THE NEAREST MANHOLE.
6. WELD SEAMS COMING UNDER MISC. ATTACHMENTS SHALL BE GROUND SMOOTH & RADIOGRAPHED FOR A DISTANCE OF 150mm BEYOND THE ATTACHMENT WELD.
5. ALL NOZZLES AND MANWAY THAT DO NOT EXTEND INTO THE VESSEL SHALL BE FINISHED FLUSH WITH THE INSIDE & THE INNER EDGE SHALL BE ROUNDED OFF TO A MIN 3mm RADIUS
4. NOZZLE POSITIONS ON VESSEL ELEVATIONS ARE CONVENTIONAL FOR TRUE LOCATION SEE NOZZLE ORIENTATION PLAN
3. NOZZLE PROJECTION IS FROM CENTER LINE OF VESSEL TO GASKET FACE OF FLANGE UNLESS SPECIFIED OTHERWISE
2. ALL FLANGE BOLT HOLES SHALL STRADDLE VERTICAL AND/OR NORTH SOUTH CENTER LINES UNLESS SHOWN OTHERWISE
1. ALL DIMENSIONS ARE IN MILLIMETERS UNLESS OTHERWISE SPECIFIED.

BELLELI SAUDI HEAVY INDUSTRIES LTD.
AS BUILT
CERTIFIED BY.....

CHIYODA PETROSTAR LTD.
JOB NO. 54001 IBN RUSHD AROMATICS PROJECT
PO NO. SAY-POP0001
REQ NO. MR-50-0-011
IDENT NO. 52003-DW-0001
PURCHASER'S REVIEWER IS PROCEED OR REVIEW STAMP ON VENDOR DRAWS SHALL NOT RELIEVE VENDOR FROM ITS RESPONSIBILITIES OR LIABILITIES UNDER PURCHASE ORDER

REV.	DATE	DESCRIPTION	DRAWN	CHK'D	APP'D
3	02.07.97	REVISED AS MARKED △3 & AS BUILT.	[illegible]	[illegible]	[illegible]
2	18.03.97	REVISED AS PER CLIENT'S COMMENTS AND MARKED AS △2	RJP	YOGESH CHAT.	AKB
1	17.12.96	DWG. GENERALLY REVISED & ISSUED FOR CONSTRUCTION	AWER	R ALI/ HAIDER	GC
0	09.06.96	ISSUED FOR APPROVAL & INTERNAL COMMENTS	DEREK	R ALI/ HAIDER	GC

No. REQUIRED : 1 UNIT

SCALE: 1:24
CLIENT: CHIYODA/IBN RUSHD
ORDER: SAY-POP0001
APPROVED FOR CONSTRUCTION BY: CIPOLLONI
DATE: 19-11-96

BELLELI SAUDI بيلليلي السعودية
HEAVY INDUSTRIES LTD. شركة البيلليلي السعودية المحدودة
AL- JUBAIL, KINGDOM OF SAUDI ARABIA. الجبيل
ARABIAN INDUSTRIAL FIBRES COMPANY (IBN RUSHD)
PTA & AROMATICS PROJECT-AROMATICS
LIFT ENGAGER NO. 2 (52-0-03)
GENERAL ASSEMBLY

DRAWING NO: DA-7034-08-001 REV. 3

802242

CHIYODA CORPORATION

CLIENT : IBN RUSHD
PROJECT : PTA & AROMATICS -
TITLE : AROMATICS
JOB NO. : 51046
DOC. NO. : DS-52-D-003 (1/1)

		REVISIONS			
MARK		1	2	3	4
APRD					
CHKD					
MADE	K. Takashima	H. Nakai			
DATE	Mar.05 '96	Jan.30 '97			

FOR RECORD

UOP

25 East Algonquin Road-PO Box 5017 · Des Plaines, Illinois 60017-5017 · USA

VESSELS

SERVICE: LIFT ENGAGER NO. 2

ITEM NO ~~D-5203~~ 52-D-03

Design Conditions At Top	INT 3.5 BAR (g) @ 260°C	1
	EXT @ °C	
	Min Metal Temperature 9°C	
Operating Conditions	38°C	
	°C	
Radiograph	MR	
Postweld Heat Treat	MR	
Joint Efficiency	MR %	

Material Specifications

Heads	SA516-70	1
Shell	SA516-70	

	Thickness Reqd By Code-mm	Corrosion + Allowance mm (Min)
Shell		3
Heads		3

Vessel Heads: Top: 2:1 Elliptical
Bottom: 2:1 Elliptical

Accessories Applied by Fabricator

Ladder & Platform Clips	NO
Insulation Clips & Rings	NO
Vessel Support	YES

Nozzles and Manways

Mark	No	Size Inches	Service
A	1	6	CATALYST INLET
B	1	10	OUTLET
C	1	5	LIFT PIPE
D	1	4	GAS INLET
E	1	12	CLEANOUT WITH BLIND
F	1	1	SAMPLE
G	1	2	DRAIN

Class-ANSI CL150

Facing-RAISED FACE

EXCEPT NOZZLES
(B) ANSI CL300
(C) DUR O LOK COUPLING
(E) STUDDED CONNECTION (PAD TYPE NOZZLE)

NOTES:

1. NOZZLE "A" TO BE OF BUILT-UP CONSTRUCTION USING SCH 80 PIPE AND WELDING NECK FLANGE BORED TO SCH 80. SEE NOTE "E" ON SHEET 4.
2. NOZZLE "C" TO BE OF BUILT-UP CONSTRUCTION USING SCH 80 PIPE AND DUR O LOK COUPLING BORED TO SCH 80. SEE NOTES "E" AND "F" ON SHEET 4.

PROJECT SPECIFICATION
560690 – 301 – 1 SHEET 7

REV	DATE	BY	APP'D	REV	DATE	BY	APP'D
0	5/15/95						
1	11/28/95	ZD	ESL				

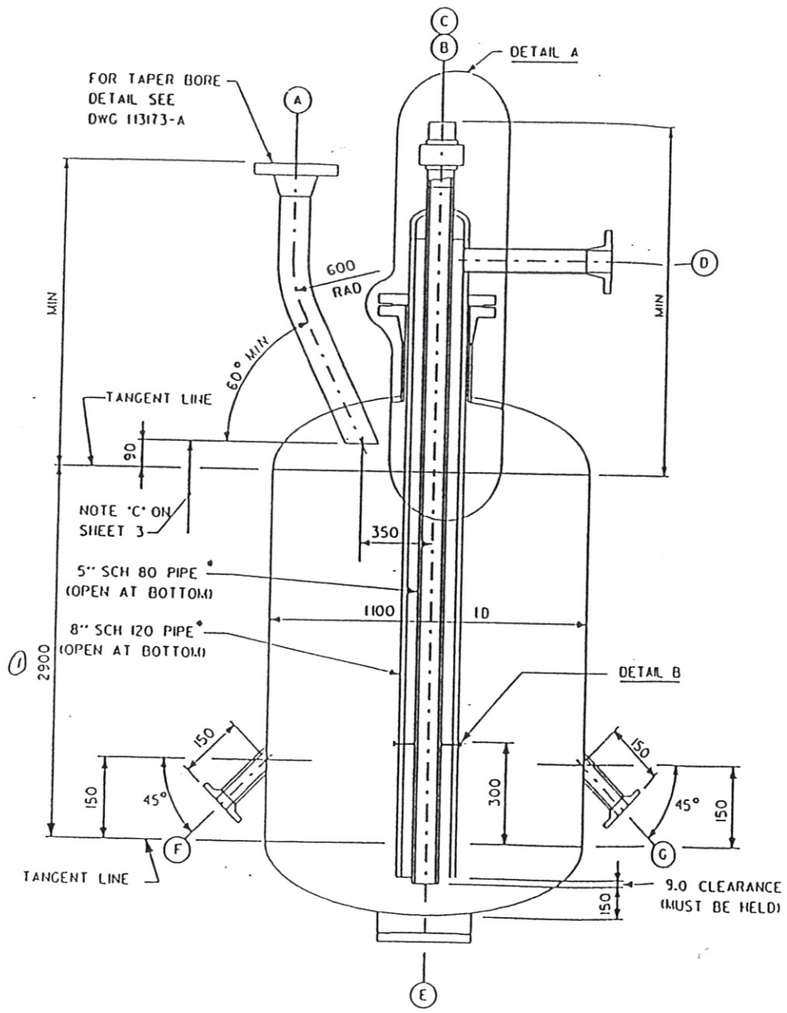

ELEVATION

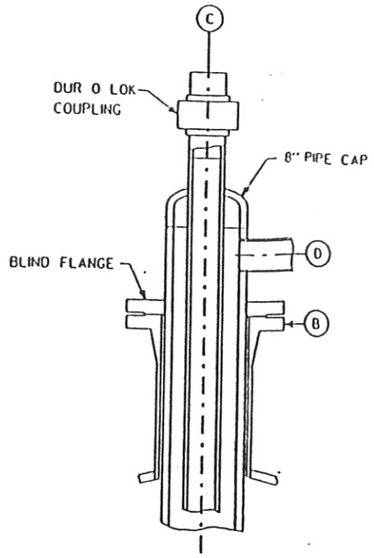

DETAIL A

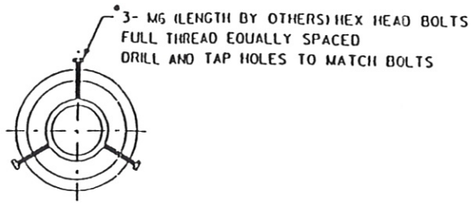

DETAIL B

* PROVIDE BOLT LENGTH TO KEEP PIPES CONCENTRIC AND TO ENABLE, WITHOUT INTERFERENCE, REMOVAL AND INSERTION OF LIFT PIPE ASSEMBLY THROUGH NOZZLE "B". SCHEDULE AND SIZE OF PIPES MUST BE HELD. PIPES SHALL BE CUT SQUARE AND ALL BURRS AT OPEN ENDS REMOVED.

Drawings Referred to in this Specification

113173-A-0					

560690v201.dgn

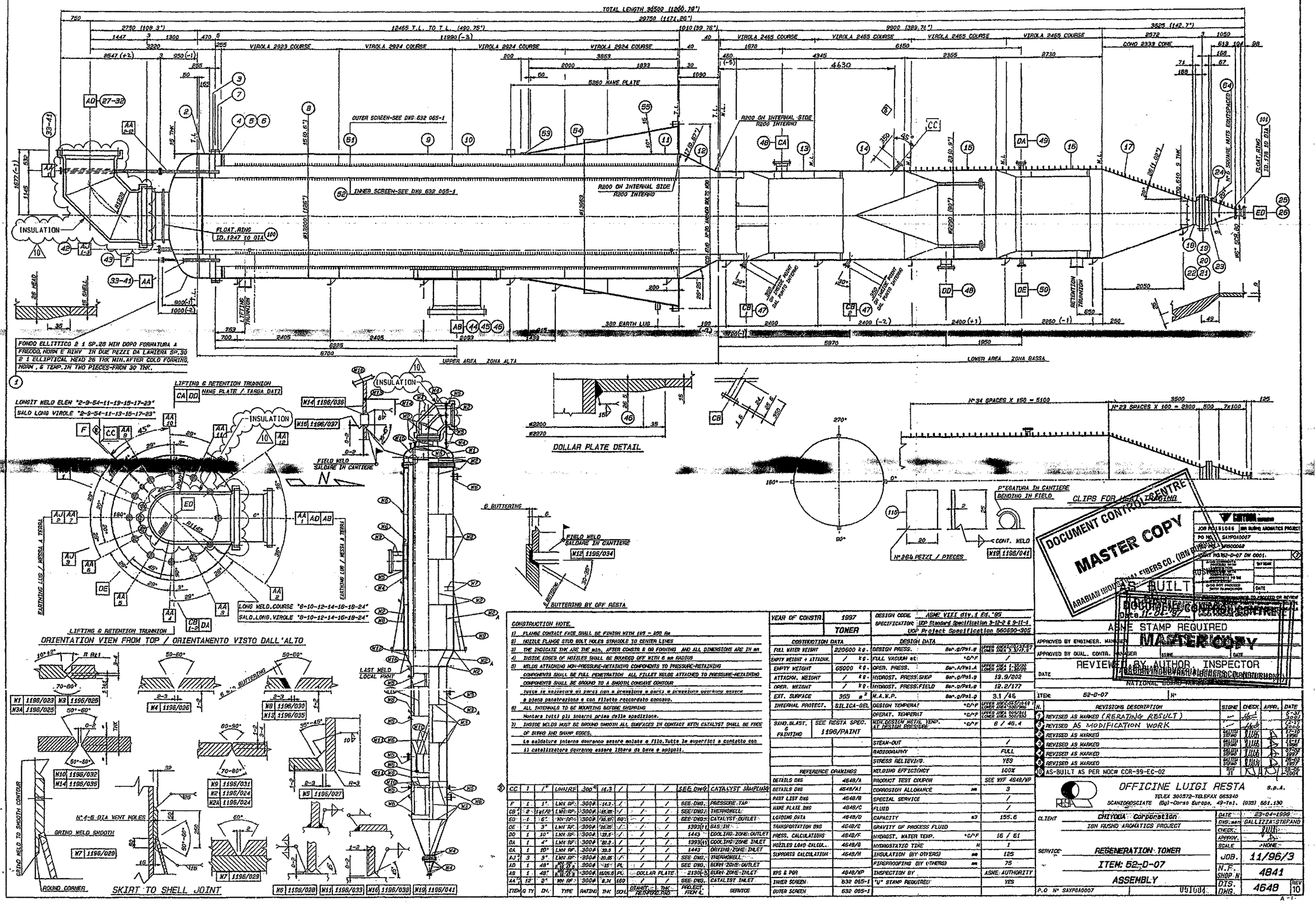

CONSTRUCTION NOTE.

1) FLANGE CONTACT FACE SHALL BE FINISH WITH 125 – 250 Ra
2) NOZZLE FLANGE STUD BOLT HOLES STRADDLE TO CENTER LINES
3) THE INDICATE THK ARE THE min. AFTER CONSTR & OR FORMING AND ALL DIMENSIONS ARE IN mm
4) INSIDE EDGES OF NOZZLES SHALL BE ROUNDED OFF WITH 6 mm RADIUS
5) WELDS ATTACHING NON-PRESSURE-RETAINING COMPONENTS TO PRESSURE-RETAINING COMPONENTS SHALL BE FULL PENETRATION ALL FILLET WELDS ATTACHED TO PRESSURE-RETAINING COMPONENTS SHALL BE GROUND TO A SMOOTH CONCAVE CONTOUR
Tutte le saldature ai pezzi non a pressione a parti a pressione dovranno essere a piena penetrazione o con filetto raccordato concavo.
6) ALL INTERNALS TO BE MOUNTING BEFORE SHIPPING
Montare tutti gli interni prima della spedizione.
7) INSIDE WELDS MUST BE GROUND SMOOTH ALL SURFACES IN CONTACT WITH CATALYST SHALL BE FREE OF BURRS AND SHARP EDGES.
Le saldature interne dovranno essere molate a filo.Tutte le superfici a contatto con il catalizzatore dovranno essere libere da bave e spigoli.

YEAR OF CONSTR.	1997
	TONER
CONSTRUCTION DATA	
FULL WATER WEIGHT	220600 kg.
EMPTY WEIGHT + ATTACH.	/ kg.
EMPTY WEIGHT	65000 kg.
ATTACHM. WEIGHT	/ kg.
OPER. WEIGHT	/ kg.
EXT. SURFACE	365 m²
INTERNAL PROTECT.	SILICA-GEL
SAND.BLAST. & PAINTING	SEE RESTA SPEC. 1196/PAINT
REFERENCE DRAWINGS	
DETAILS DWG	4648/A
DETAILS DWG	4648/A1
PART LIST DWG	4648/B
NAME PLATE DWG	4648/C
LOADING DATA	4648/D
TRANSPORTATION DWG	4648/E
PRESS. CALCULATIONS	4648/F
NOZZLES LOAD CALCUL.	4648/G
SUPPORTS CALCULATION	4648/H
NPS & PGR	4648/NP
INNER SCREEN	632 065-1
OUTER SCREEN	632 065-1

DESIGN CODE	ASME VIII div.1 Ed.'95
SPECIFICATION	UOP Standard Specification 9-11-2 & 9-11-1
	UOP Project Specification 560690-305
DESIGN DATA	
DESIGN PRESS. Bar.g/Psi.g	UPPER AREA 10.2/147 LOWER AREA 3.3/47.9
FULL VACUUM at °C/°F	/
OPER. PRESS. Bar.A/Psi.A	UPPER AREA 1.33/20 LOWER AREA 1.38/20
HYDROST. PRESS SHOP Bar.g/Psi.g	13.9/202
HYDROST. PRESS FIELD Bar.g/Psi.g	12.2/177
M.A.W.P. Bar.g/Psi.g	3.1 /45
DESIGN TEMPERAT °C/°F	UPPER AREA 300/572 LOWER AREA 230/446
OPERAT. TEMPERAT °C/°F	UPPER AREA 204/399 LOWER AREA 200/392
MIN.DESIGN METAL TEMP. AT DESIGN PRESSURE °C/°F	6 / 46.4
STEAM-OUT	/
RADIOGRAPHY	FULL
STRESS RELIEVING	YES
WELDING EFFICIENCY	100%
PRODUCT TEST COUPON	SEE WKF 4648/NP
CORROSION ALLOWANCE mm	3
SPECIAL SERVICE	/
FLUID	/
CAPACITY m3	155.6
GRAVITY OF PROCESS FLUID	/
HYDROST. WATER TEMP. °C/°F	16 / 61
HYDROSTATIC TIME H	1
INSULATION (BY OTHERS) mm	125
FIREPROOFING (BY OTHERS) mm	75
INSPECTION BY	ASME AUTHORITY
"U" STAMP REQUIRED	YES

ITEM	Q TY	DN.	TYPE	RATING	THK	SCH.	DIAMET. REINFORC.PAD	THK REINFORC.PAD	PROJECT. FICH &	SERVICE
CC	1	1"	LWN RF	300#	14.3	/	/	/	SEE DWG.	CATALYST SAMPLING
F	1	1"	LWN RF	300#	14.3	/	/	/	SEE DWG.	PRESSURE TAP
CB 1	2	1 1/2"	LWN RF	300#	15.85	/	/	/	SEE DWG.	THERMOWELL
EO	1	6"	NW RF	300#	10.97	80	/	/	SEE DWG.	CATALYST OUTLET
OE	1	3"	LWN RF	300#	20.05	/	/	/	1393(1)	GAS IN
DD	1	10"	LWN RF	300#	33.5	/	/	/	1443	COOLING ZONE OUTLET
DA	1	4"	LWN RF	300#	22.2	/	/	/	1393(1)	COOLING ZONE INLET
CA	1	10"	LWN RF	300#	33.5	/	/	/	1443	DRYING ZONE INLET
AJ 1	3	3"	LWN RF	300#	20.05	/	/	/	SEE DWG.	THERMOWELL
AD	1	48"	WN RF	300#	15	PL	/	/	SEE DWG.	BURN ZONE OUTLET
AB	1	48"	WN RF	300#	15/26.6	PL	DOLLAR PLATE		2190(-3)	BURN ZONE INLET
AA 1	12	2"	WN RF	300#	8.74	160	/	/	SEE DWG.	CATALYST INLET

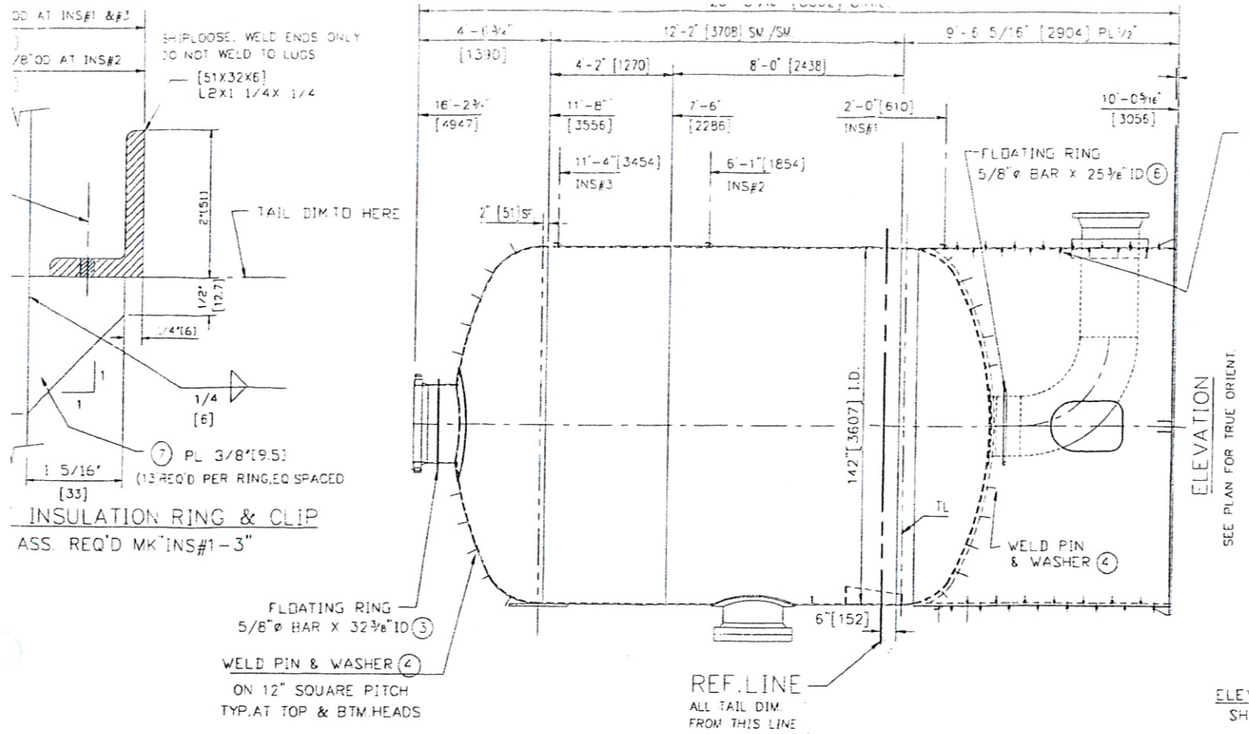

ITEM NO.	UNIT QTY	TOT QTY	DESCRIPTIONS	MATERIAL	REMARKS	PART NAME
			XXXXXXXXXXXXXXXXXXXXXXXXXXXX			
1	2	4	L 2 X 1 1/4 X 1/4 X 38'-3 7/16" LG.	SA-36		INS#1&3
2	1	2	L 2 X 1 1/4 X 1/4 X 38'-3 7/8" LG.	SA-36		INS#2
3	1	2	BAR 5/8"ø X 8'-7 11/16" LG.	SA-36		RG.FOR A
4	270	540	WELD PIN AND WASHER	CS		
5	560	1120	3/4" SQUARE NUTS	CS		FIREPROOF
6	1	2	BAR 5/8"ø X 8'-9 11/16" LG.	SA-36		RG.FOR CW
7	39	78	PL 3/8" X 1 5/16" X 1 13/16" LG.	SA-516-70		INS.LUG
8	1	2	PL 5/8" X 142 1/4"OD X 136 1/4" ID	SA-240-T316L		INT.RG.
9	4	8	PL 5/8" X 6 5/16" X 10" LG.	SA-240-T316L		CLIP
10	4	8	PL 5/8" X 19 3/4" X 18" LG.	SA-240-T316L		SUP'T
11	4	8	PL 5/8" X 7 11/16" X 22 3/4" LG.	SA-240-T316L		SUP'T
12	4	8	PL 5/8" X 15 11/16" X 18" LG.	SA-240-T316L		SUP'T
13	12	24	5/8"ø X 2 1/2" LG. H.H.M.BOLT w/(1)H.N.E.A.	T316L		BOLTING
14	2	4	PL 1" X 14" X 10'-8 1/4" LG.	SA-240-T316L		BEAM PL
15	2	4	PL 1" X 14" X 10'-2 3/16" LG.	SA-240-T316L		BEAM PL
16	2	4	PL 1" X 12" X 10'-0 1/2" LG.	SA-240-T316L		BEAM PL
17	1	2	PL 1" X 14" X 11'-8 1/4" LG.	SA-240-T316L		BEAM PL
18	1	2	PL 1" X 14" X 11'-2 3/4" LG.	SA-240-T316L		BEAM PL
19	1	2	PL 1" X 12" X 11'-8 1/4" LG.	SA-240-T316L		BEAM PL
20	2	4	PL 5/8" X 7" X 18" LG.	SA-240-T316L		SUPT PL
21	2	4	PL 5/8" X 7" X 22 3/4" LG.	SA-240-T316L		SUPT PL
22	2	4	PL 5/8" X 4" X 18" LG.	SA-240-T316L		SUPT PL
23	2	4	PL 5/8" X 7" X 10" LG.	SA-240-T316L		CLIPS

MAX.CARBON CONTENT OF CARBON STEELS SHALL BE LIMITED TO 0.25%
DIMENSIONS SHOWN IN BRACKETS ARE IN MILLIMETERS

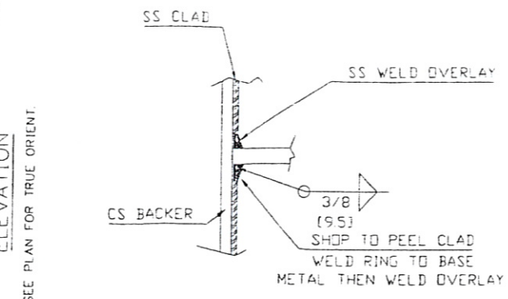

TYP.OF WELD FOR SUPPORT CLIP

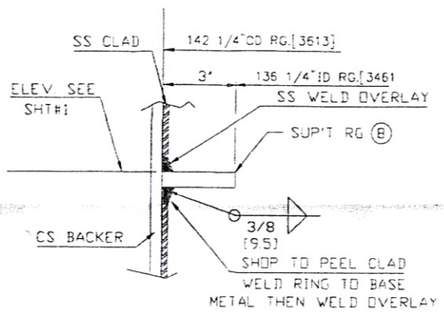

SECT.S-S
CATALYST SUP'T RG.DETAIL

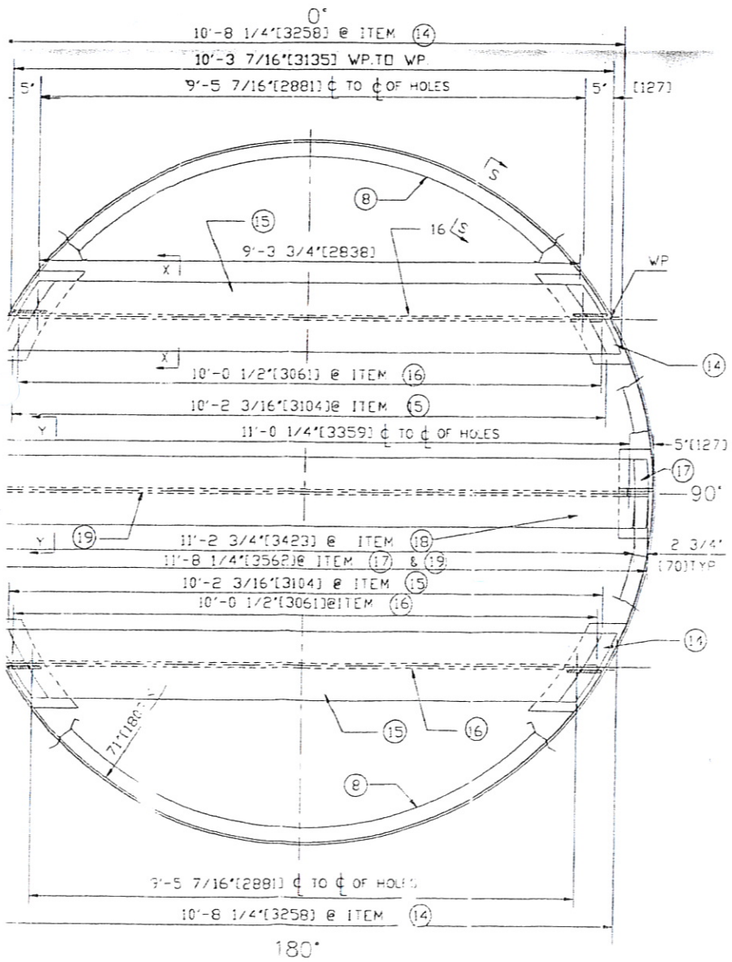

PLAN OF BEAM SUPPORT ASSEMBLY

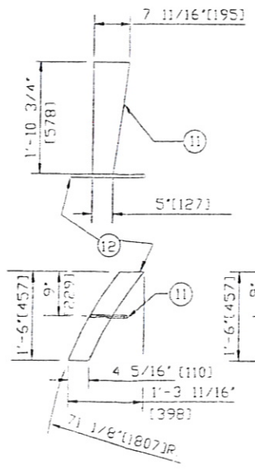

SECTION A-A

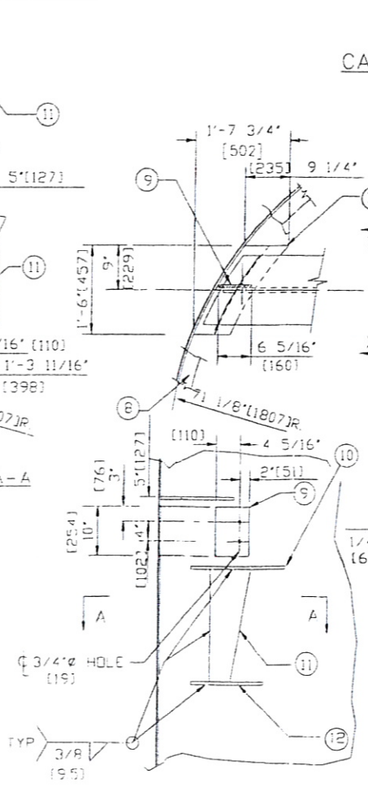

DET.CATALYST SUPPORT BEAM
(2) REQ'D AS SHOWN,(2) OPP.HAND

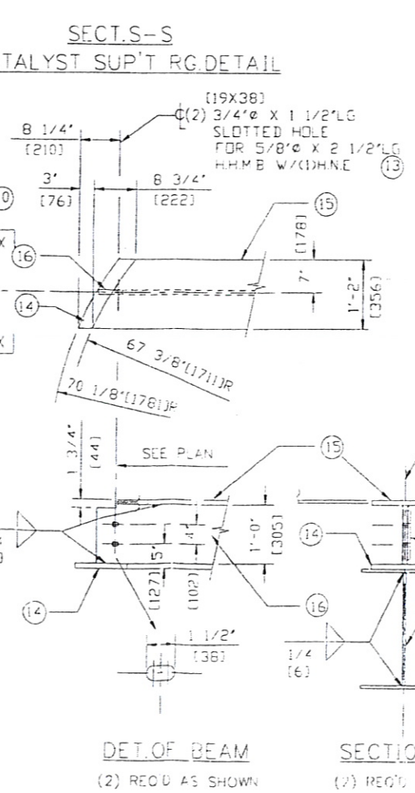

DET.OF BEAM
(2) REQ'D AS SHOWN
(2) OPP.HAND

SECTION X-X
(2) REQ'D AS SHOWN
(2) OPP.HAND

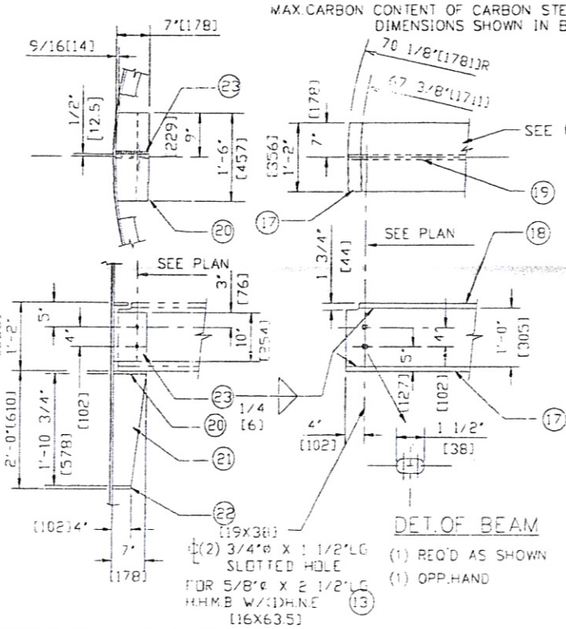

DET.CATALYST SUPPORT BEAM
(1) REQ'D AS SHOWN,(1) OPP.HAND

DET.OF BEAM
(1) REQ'D AS SHOWN
(1) OPP.HAND

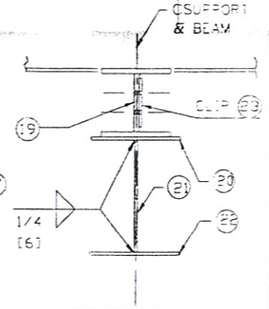

SECTION Y-Y
(1) REQ'D AS SHOWN
(1 OPP.HAND

CHIYODA CORPORATION
JOB NO. 51046 IBN RUSHD AROMATICS PROJECT
PO NO. SAYPOH0015
REQ NO. MR-50-D-010
IDENT NO. 52-D-1746-D01 CODE
A RELEASED FOR CONSTRUCTION
B RELEASED FOR PROCUREMENT WITH FABRICATION
C RELEASED FOR PROCUREMENT WITHOUT FABRICATION
D RELEASED FOR INFORMATION
FOR CHIYODA PERMISSION TO PROCEED OF REVIEW DRAWINGS FROM ITS RESPONSIBILITIES OR LIABILITIES UNDER PURCHASE ORDER

CERTIFIED
BY O. Ware
DATE 6-2-97

PRINT RECORD

DATE	REV.	FOR	NO.
2-20	0	CUST	1+5
2-20	0	SHOP	18

BY	DATE	CKD BY	M C
LAM	5-29		
LAM	2-20	SC	DF 2-20

REVISIONS
A ISSUED CERTIFIED
0 ISSUED FOR FAB.

PROJ.MGR: DICK WILLIAMS DATE PH. NO :(713) 676-6044

ALLIED INDUSTRIES, INC.
HOUSTON, TX.
ISO-9001 CERTIFIED
COMMITTED TO EXCELLENCE

TITLE: (2) 142" ID X 12'-2" SM./SM. REGENERATION DRYER
ITEM NO. 52-D-17A & B
CUSTOMER: CHIYODA INTERNATIONAL CORPORATION
PROJECT TITLE: IBN RUSHD PTA & AROMATICS PROJECT AROMATICS ARABIAN INDUSTRIAL FIBERS CO.LTD
CUST. P.O. SAYPOH0015
DESCRIPTION: DET.OF INSULATION & CATALYST BEAM SUP'T

DRAWN BY: LAM DATE: 12-5-96
CHK'D. BY: SC DATE 2-20-97
APPROVED FOR FABRICATION DATE: 2-20-97
S/O. 8004101
DWG. NO D96-8514-01
REV.
SHT. 6 OF

3rd. ANGLE PROJECTION

REFERENCE					
NO.	DATE	BY	DESCRIPTION	D. S. M. APP'D	Q. A. REV'D
A	OCT.1.'96	T.Y	ISSUED FOR CONSTRUCTION		
B	FEB.5.97	H.Y	AS BUILT		

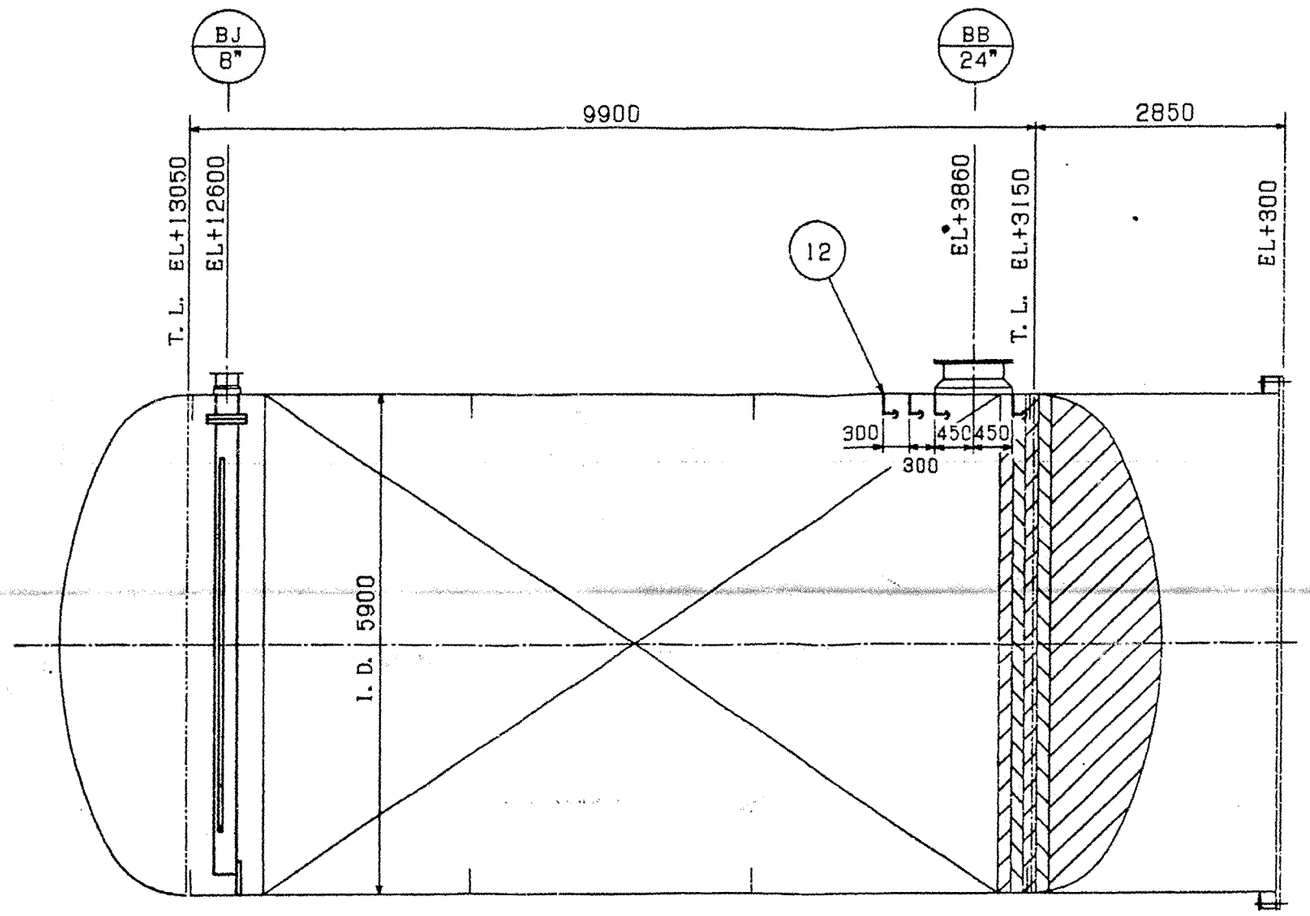

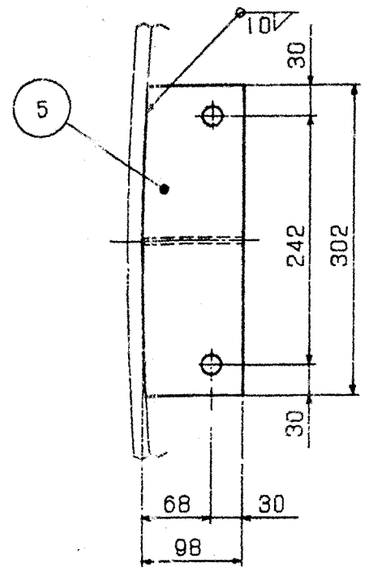

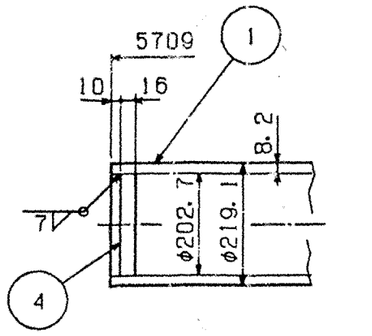

DETAIL B

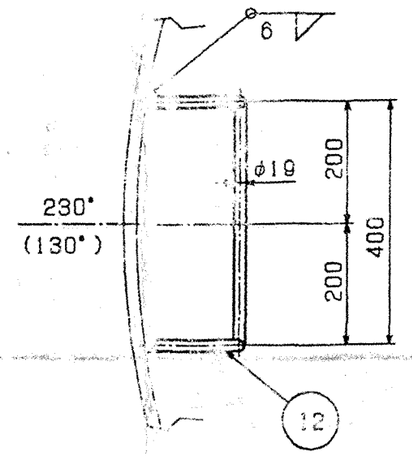

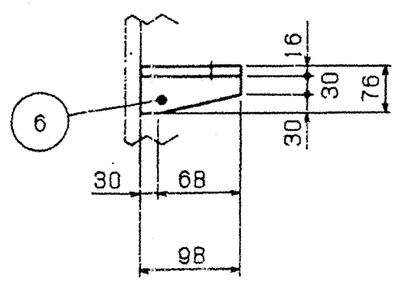

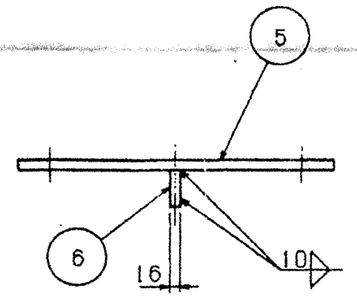

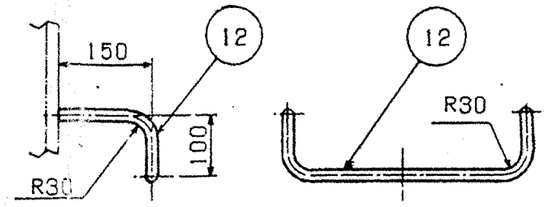

DETAIL OF INTERNAL LADDER

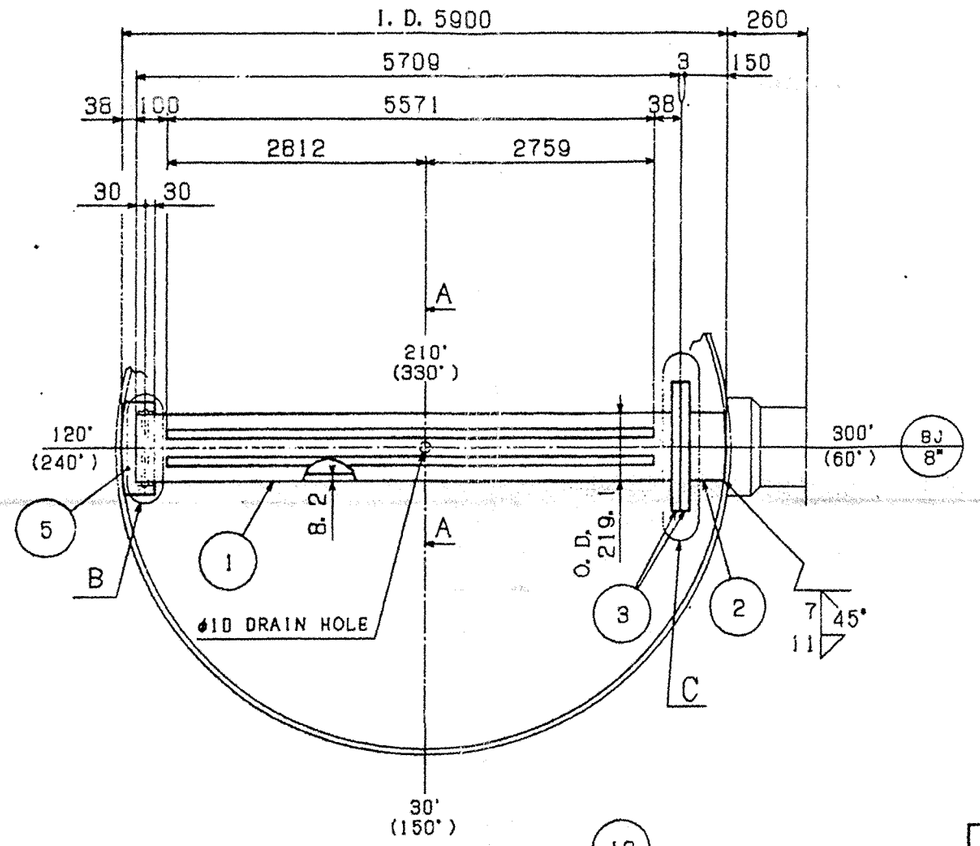

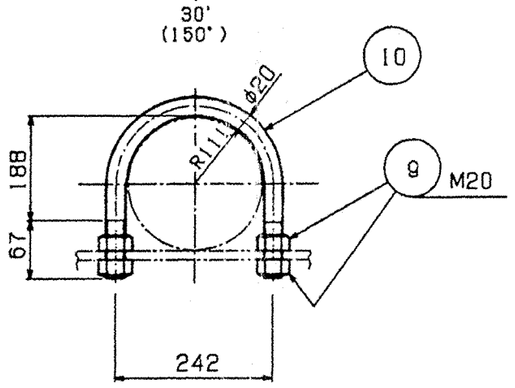

(FOR 8")

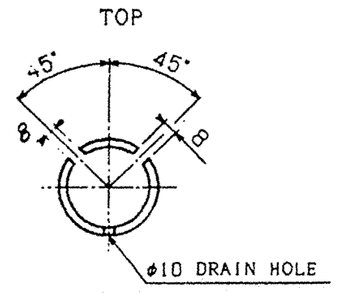

SEC. A-A

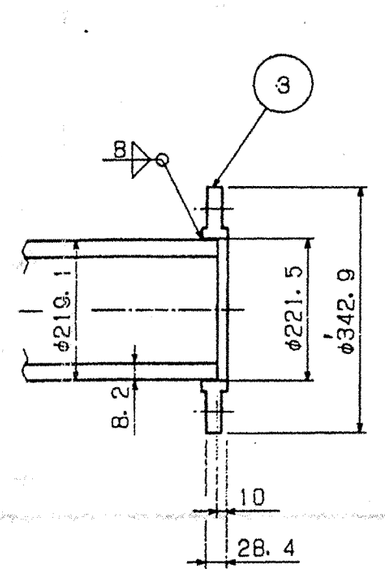

DETAIL C

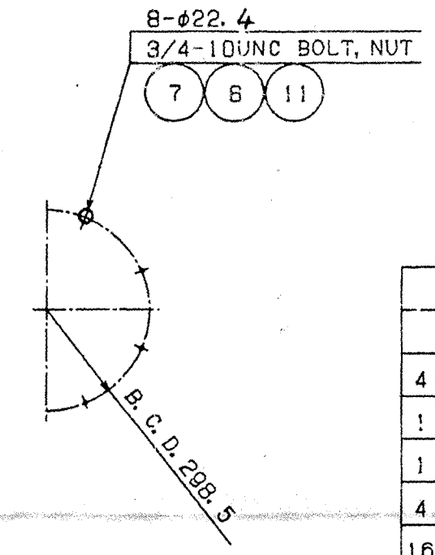

NOTE

1. 51-D-14B 'S ORIENTATION SHOWN IN ( )

			TOTAL			295.7 Kg /VESSEL		
4	INT. LADDER	12	SA-36		1.5	6.0	φ19	0
1	GASKET	11	T/#1995 NON ASBESTOS			-	O. D. I. D. t3 X 279.4 X 218.9	0
1	M20 U-BOLT	10	SUS304			1.2	(FOR 8")	0
4	M20 NUT	9			0.1	0.4		0
16	3/4-10UNC NUT	8			0.2	3.2		0
8	3/4-10UNC STUD BOLT	7	SUS304		0.3	2.4	120ℓ	0
1	SUPPORT	6	SA-516-70			0.7	t16	0
1	SUPPORT	5	SA-516-70			3.7	t16	0
1	CLOSURE PLATE	4	SA-516-70			4.1	t16	0
2	8" INTERNAL FLANGE	3	SA-105		12.0	24.0	ANSI 150#RFSO	0
1	8" INTERNAL PIPE	2	SA-106-B			6.4	t8.2(SCH40)	0
1	8" INTERNAL PIPE	1	SA-106-B			243.6	t8.2(SCH40)	0
NO. REQUIRED	PARTICULARS	MARKS	MATERIAL	TEST MARKS	1-OFF CAL. WT (kg)	TOTAL CAL. WT (kg)	REMARKS	

ASME STAMP YES

DIV. 1 '95
BY ASME SECTVIII
1995 EDITION

REVIEWED BY
Q. A. ENGINEER
DATE

CHIYODA CORPORATION

JOB NO 51046 IBN RUSHD AROMATICS PROJECT
PO NO.
REQ NO.
IDENT NO.
A. DO COMMENCE PROCEED WITH FABRICATION
B. PROCEED WITH FABRICATION CHANGES TO BE CONSIDERED
C. DO NOT PROCEED WITH FABRICATION
SA TEAM
DATE

PURCHASER'S PERMISSION TO PROCEED OR REVIEW TAKEN ON VENDOR PRINTS SHALL NOT RELIEVE VENDOR FROM ITS RESPONSIBILITIES OR LIABILITIES UNDER PURCHASE ORDER

SASEBO HEAVY INDUSTRIES CO., LTD
MACHINERY DESIGN DEPT.

APPROVED BY AUG. 2. '96
CHECKED BY AUG. 2. '96
CERTIFICATED BY AUG 2 1996
DRAWN BY T. Tamada
DATE DRAWN AUG. 2. 1996
DATE ISSUED

CHIYODA CORPORATION

IBN RUSHD PTA&
AROMATICS PROJECT-AROMATICS

CLAY TREATERS
51-D-14 A&B
INTERNAL

004288

NO. REQUIRED	DATE DRAWN	DWG. No	REV.
SHOWS 1 SET	AUG. 2. 1996	B81481-124-01	B
MAKE FOR 2 SETS	WORK No. 43755	CLASS	SCALE 1/1 80.10.6

DWG. No. B81481-124-01 REV. B

SASEBO HEAVY INDUSTRIES CO., LTD. JAPAN

REPRO ©

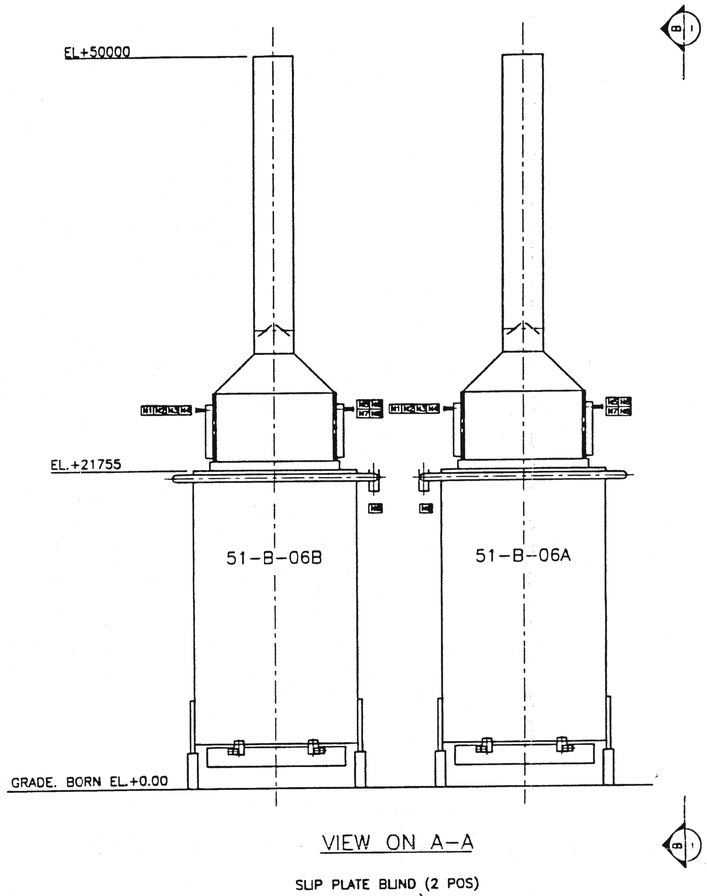

VIEW ON A-A

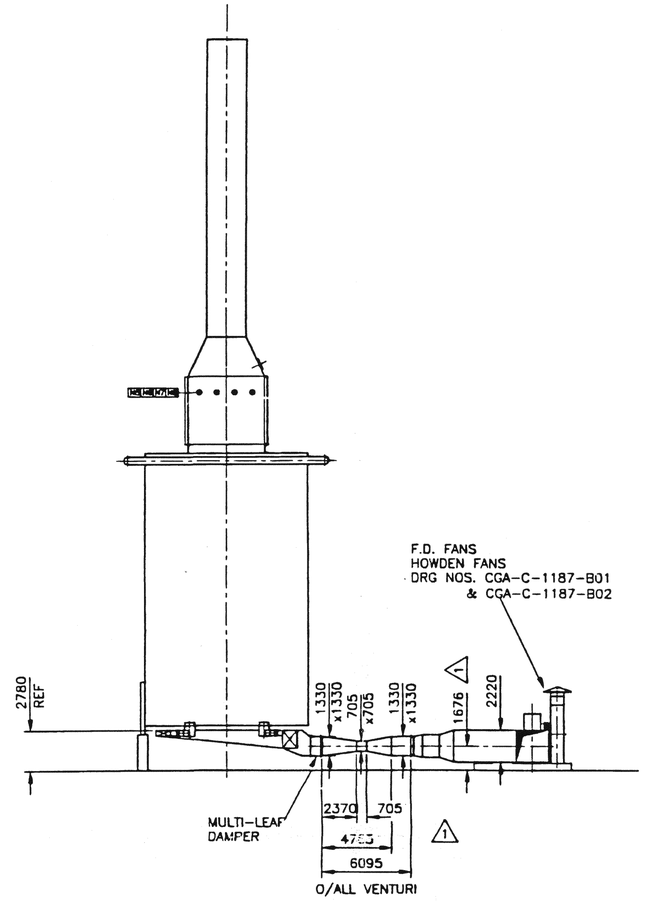

VIEW ON B-B

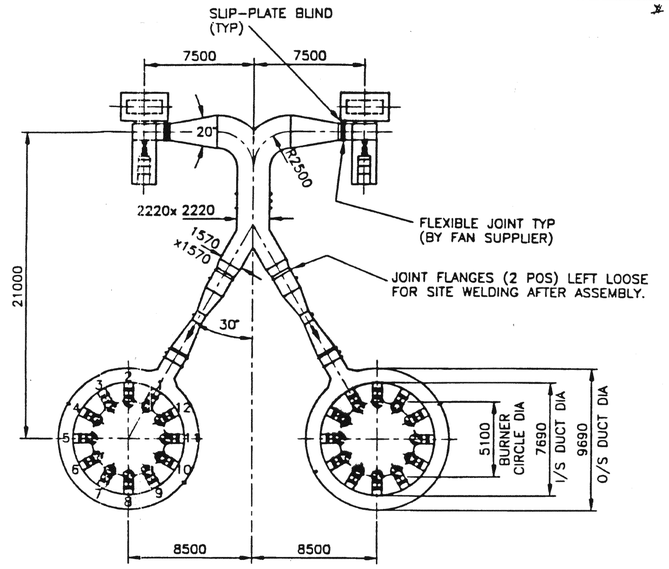

PLENUM DUCT FREE FLOW AREAS
AT BURNER 1,2,12 : 1.23 m²
AT BURNER 3,11 : 1.03 m²
AT BURNER 4,10 : 0.83 m²
AT BURNER 5,9 : 0.60 m²
AT BURNER 6,8 : 0.40 m²
AT BURNER 7 : 0.375 m²

1 PLAN ON BURNER DUCT

NOTE. ALL DUCT SIZES I/SIDE STEEL
(DUCT UNLINED)

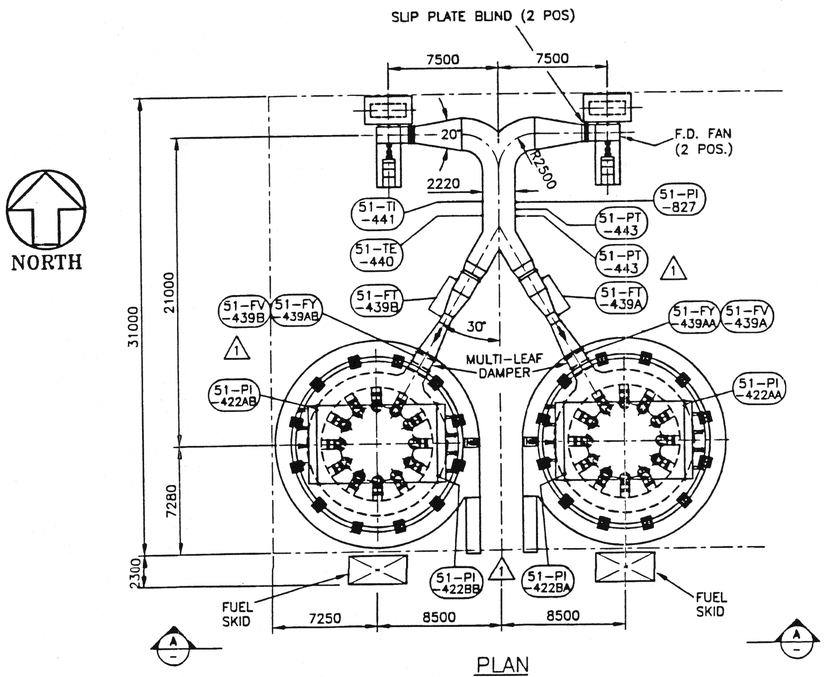

PLAN

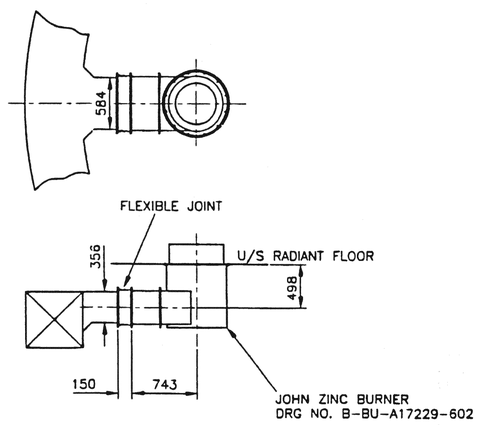

1 BURNER/DUCT DETAIL

RETURNED SEP - 2. 1996

RECVD AUG 1 2.1996

CHIYODA

JOB NO. 51046	IBN RUSHD AROMATICS PROJECT
PO NO.	SAYPOE0002
REQ NO.	22854000B501
IDENT NO.	22854000B501DW0025
A-NO COMMENTS PROCEED WITH FABRICATION	SAY TEAM
B-PROCEED WITH FABRICATION COMMENTS TO BE CONSIDERED	
C-DO NOT PROCEED WITH FABRICATION	DATE 22 Aug '96

PURCHASER'S PERMISSION TO PROCEED OR REVIEW TAKEN ON VENDOR PRINTS SHALL NOT RELIEVE VENDOR FROM ITS RESPONSIBILITIES OR LIABILITIES UNDER PURCHASE ORDER

BORN

DRAWING TITLE
OVERALL LAYOUT & PLOT

SERVICE 51-B-06 STRIPPER REBOILER

FOR IBN RUSHD 064021

REV.	BY	DATE	CHECKED	DATE	APPROVED	DATE
1	RE	17.7.96	GT	26.7.96		5/8/96

BURNER PLENUM DETAILS ADDED. FANS RE-POSITIONED.
OTHER REVISIONS PER CLIENT RETURN PRINT DATED 21.5.96.
BURNER PLENUM CENTRE-LINE DIM'N OF 1676 WAS 1328.

DRAWN:	DATE:	CHECKED:	DATE:	APPROVED:	DATE:
STEPHENS	JAN '96	G.T	29.2.96	RG	7.3.96

JOB No. 2881 | DRAWING NO. 2881-51B06-01A | REV. 1

FILENAME: X:\DWGS\2881-5106-01A
SCALE: 1:200
ORIGINAL SIZE:

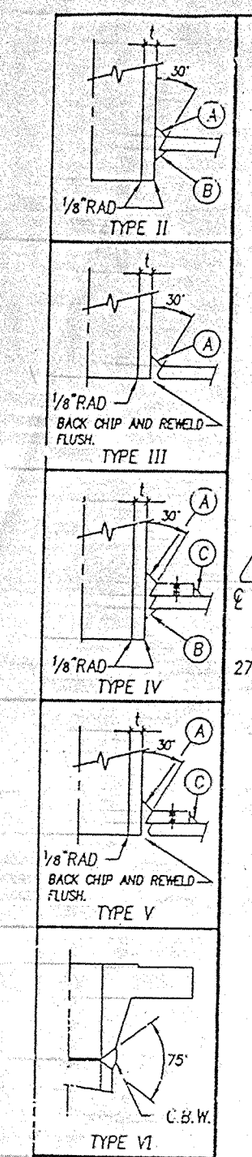

SHOP NOTE: BOLT HOLES IN NOZZLES LOCATED ON TOP HEAD ARE TO STRADDLE VESSEL ℄'S

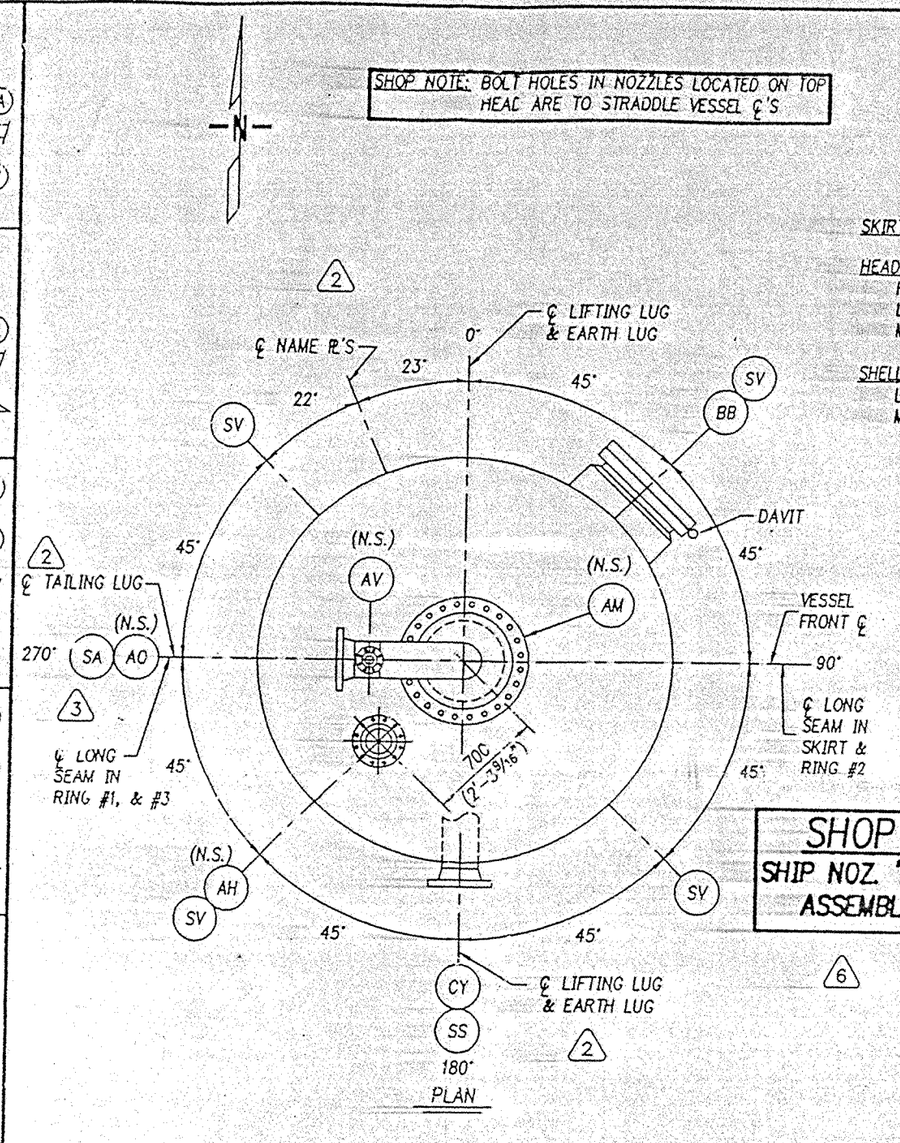

PLAN

MATERIAL

SKIRT: 10 (3/8") ℞ SA-516-60 (NORM.)

HEADS: 32 (1 1/4") MIN. X 2400 (94 1/2") I.D. ELLIP
HEAD 2:1 RATIO SA-516-60 (NORM.)
LCVN FOR 15/12 FT. LBS. @ -49°F
MAX CARBON CONTENT = 0.25%

SHELL: 32 (1 1/4") ℞ SA-516-60 (NORM.)
LCVN FOR 15/12 FT. LBS. @ -49°F
MAX CARBON CONTENT = 0.25%

SHOP NOTE

SHIP NOZ. "AO" & "AM" ASSEMBLY LOOSE

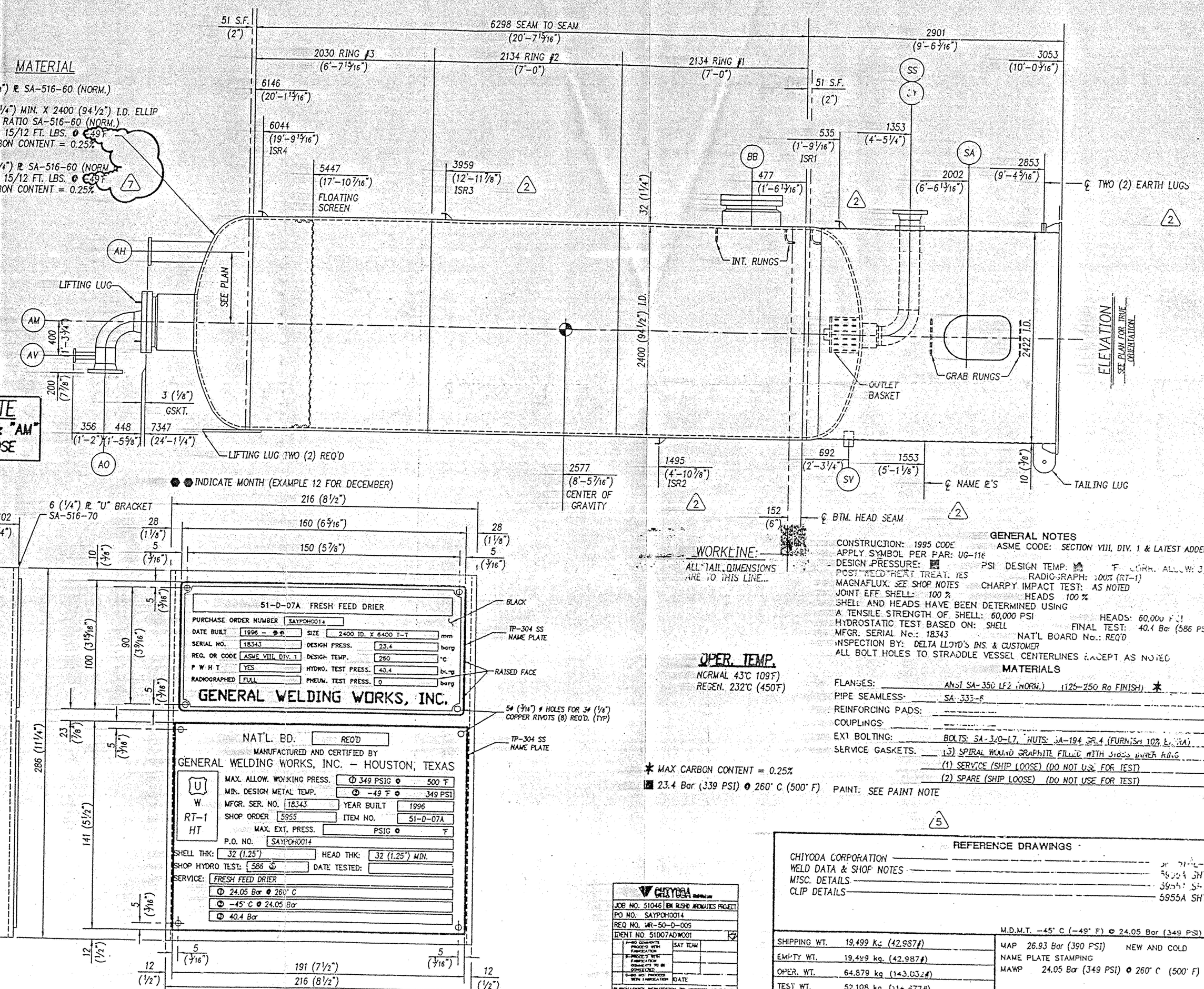

PAINT NOTE

NEAR WHITE BLAST ENTIRE VESSEL INCLUDING O.S. SKIRT DOWN TO & INCLUDING "ISR1" & APPLY

PRIMER: CARBOLINE CARBOZINE 11HS INORGANIC ZINC SILICATE TO A D.F.T. OF 75 MICRONS (3.0 MILS)

FINISH: CARBOLINE 4674 HEAT RESISTANT SILICONE ALUMINUM TO A D.F.T. OF 25 MICRONS (1.0 MILS)

COMMERCIAL BLAST O.S. SKIRT BELOW "ISR1" & I.S. SKIRT & APPLY CARBOLINE 893 EPOXY MASTIC TO A D.F.T. OF 125 (5 MILS).

● ● INDICATE MONTH (EXAMPLE 12 FOR DECEMBER)

DETAIL NAME PLATE
ONE REQ'D.

● 500 (19 5/8") X 750 (29 1/2")

● FOR REFERENCE ONLY

MARK	NO REQUIRED	SIZE	RATING	FACING	BORE	OD NECK	FACE FROM VESSEL ℄	O.S. PROJ.	I.S. PROJ.	TYPE	"A"	"B"	"C"	REINF. PAD	BLD	NO STUDS	SIZE STUDS	GASKET	SERVICE
SV	4	4"	PIPE	SEE DETAIL SHT. #3	----	----	----	----	----	----	----	----	----	----	----	----	----	----	SKIRT VENTS
SS	1	18"	PIPE	SEE DETAIL SHT. #3	----	----	----	----	----	----	----	----	----	----	----	----	----	----	SKIRT SLEEVE @ "CY"
SA	1	●	E	SEE DETAIL SHT #3	----	----	----	----	----	----	----	----	----	----	----	----	----	----	SKIRT ACCESS
CY	1	8"	300#	SEE DETAIL SHT. #3	● SCH 80	● 219 (8 5/8")	1450 (4'-9 1/16")	● 229 (9") ●	----	● III, VI	● 14 (9/16")	----	----	----	----	----	----	----	INLET
BB	1	18"	300#	RF SELF-REINF. NOZ. X 381 (15") LG.	457 (18")	678 (26 11/16")	1525 (5'-0 1/16")	293 (11 9/16")	----	● III, IX	● 14 (9/16")	----	----	----	YES	24	1 1/4" ø X 8" LG.	"CG"	MANWAY
AV	1	2"	300#	SEE DETAIL SHT. #3	● 51 (2")	● 84 (3 5/16")	SEE ELEV. ●	SEE ELEV. ●	----	● III, X	● 9.5 (3/8")	----	----	----	----	----	----	----	VENT
AO	1	8"	300#	SEE DETAIL SHT. #3	● 194 (7 5/8")	● 219 (8 5/8")	SEE ELEV. ●	SEE ELEV. ●	----	● VI	----	----	----	----	----	----	----	----	OUTLET
AM	1	18"	300#	SEE DETAIL SHT. #3	● 457 (18")	● 552 (25 11/16")	SEE ELEV. ●	SEE ELEV. ●	----	● III, IX	● 14 (9/16")	----	----	----	● YES	● 24	1 1/4" ø X 8 3/4" LG ●	"CG"	MANWAY
AH	1	6"	300#	RF SELF-REINF. NOZ. X 137 (29") LG	146 (5.761")	237 (9 5/16")	SEE ELEV.	SEE ELEV.	----	III, X	14 (9/16")	----	----	----	----	----	----	----	RELIEF

SCHEDULE OF OPENINGS

GENERAL NOTES

CONSTRUCTION: 1995 CODE — ASME CODE: SECTION VIII, DIV. 1 & LATEST ADDENDA
APPLY SYMBOL PER PAR: UG-116
DESIGN PRESSURE: ■ PSI — DESIGN TEMP. ■ °F — CORR. ALLOW: 3 (
POST-WELD HEAT TREAT: YES — RADIOGRAPH: 100% (RT-1)
MAGNAFLUX: SEE SHOP NOTES — CHARPY IMPACT TEST: AS NOTED
JOINT EFF SHELL: 100 % — HEADS 100 %
SHELL AND HEADS HAVE BEEN DETERMINED USING
A TENSILE STRENGTH OF SHELL: 60,000 PSI — HEADS: 60,000 PSI
HYDROSTATIC TEST BASED ON: SHELL — FINAL TEST: 40.4 Bar (586 PSI)
MFGR. SERIAL No.: 18343 — NAT'L BOARD No.: REQ'D
INSPECTION BY: DELTA LLOYD'S INS. & CUSTOMER
ALL BOLT HOLES TO STRADDLE VESSEL CENTERLINES EXCEPT AS NOTED

MATERIALS

FLANGES: ANSI SA-350 LF2 (NORM.) (125-250 Ra FINISH) *
PIPE SEAMLESS: SA-333-6
REINFORCING PADS: ----
COUPLINGS: ----
EXT BOLTING: BOLTS: SA-320-L7, NUTS: SA-194 GR.4 (FURNISH 10% EXTRA)
SERVICE GASKETS: (3) SPIRAL WOUND GRAPHITE FILLED WITH SS316 INNER RING
(1) SERVICE (SHIP LOOSE) (DO NOT USE FOR TEST)
(2) SPARE (SHIP LOOSE) (DO NOT USE FOR TEST)

OPER. TEMP.

NORMAL 43°C (109°F)
REGEN. 232°C (450°F)

* MAX CARBON CONTENT = 0.25%
■ 23.4 Bar (339 PSI) @ 260° C (500° F) — PAINT: SEE PAINT NOTE

REFERENCE DRAWINGS

CHIYODA CORPORATION — JOB NO. 51046
WELD DATA & SHOP NOTES — 59955 SHT
MISC. DETAILS — 59955 SHT.
CLIP DETAILS — 5955A SHT

CHIYODA — JOB NO. 51046 IBN RUSHD AROMATICS PROJECT
PO NO. SAYPOH0014
REQ NO. MR-50-D-005
IDENT NO. 51007ADW001
APPROVED PROCEED WITH FABRICATION — SAT TEAM
APPROVED NOT TO PROCEED WITH FABRICATION UNTIL REVISED AND RESUBMITTED
CONDITIONAL PROCEED WITH FABRICATION — DATE
PURCHASER'S PERMISSION TO PROCEED OR REVIEW TAKEN ON VENDOR PRINTS SHALL NOT RELIEVE VENDOR FROM ITS RESPONSIBILITIES OR LIABILITIES UNDER PURCHASE ORDER.

M.D.M.T. -45° C (-49° F) @ 24.05 Bar (349 PSI)

SHIPPING WT.	19,499 Kg. (42,987#)
EMPTY WT.	19,499 kg. (42,987#)
OPER. WT.	64,879 kg. (143,034#)
TEST WT.	52,108 kg. (114,877#)

MAP 26.93 Bar (390 PSI) NEW AND COLD
NAME PLATE STAMPING
MAWP 24.05 Bar (349 PSI) @ 260° C (500° F)

ONE VESSEL REQ'D.

S/O 5955

GENERAL WELDING WKS.
HOUSTON, TEXAS

2400 (94 1/2") I.D. X 6298 (20'-7 15/16") SEAM
FRESH FEED DRIER
ITEM NO: 51-D-07A
CHIYODA CORPORATION, YOKOHAMA, JAPA
ARABIAN INDUSTRIAL FIBERS CO. LTD.
IBN RUSHD AROMATICS PROJECT

CUSTOMER: CHIYODA INTERNATIONAL CORP.
P.O. No. SAYPOH0014
DRAWN: JS — CHECKED: LC — DATE: 7-

No.	REVISIONS	DWN	DATE	CHK
7	CORRECT ℃ TO °F	LC	1/27	CH
6	ADD SHOP NOTE	LC	1/9	EH
5	REV. PAINT NOTE	LC	11/26	EH
4	ADDED CLIP SHT. #7	EH	11/12	LC
3	ADD SKIRT ACCESS IN ORIENT.	SH	10/31	LC
2	REV. AS NOTED	LC	10/23	SH
1	REV. PER CUST. COMMENTS	JS	9/4	EH

DWG. NO. 5955A

009006

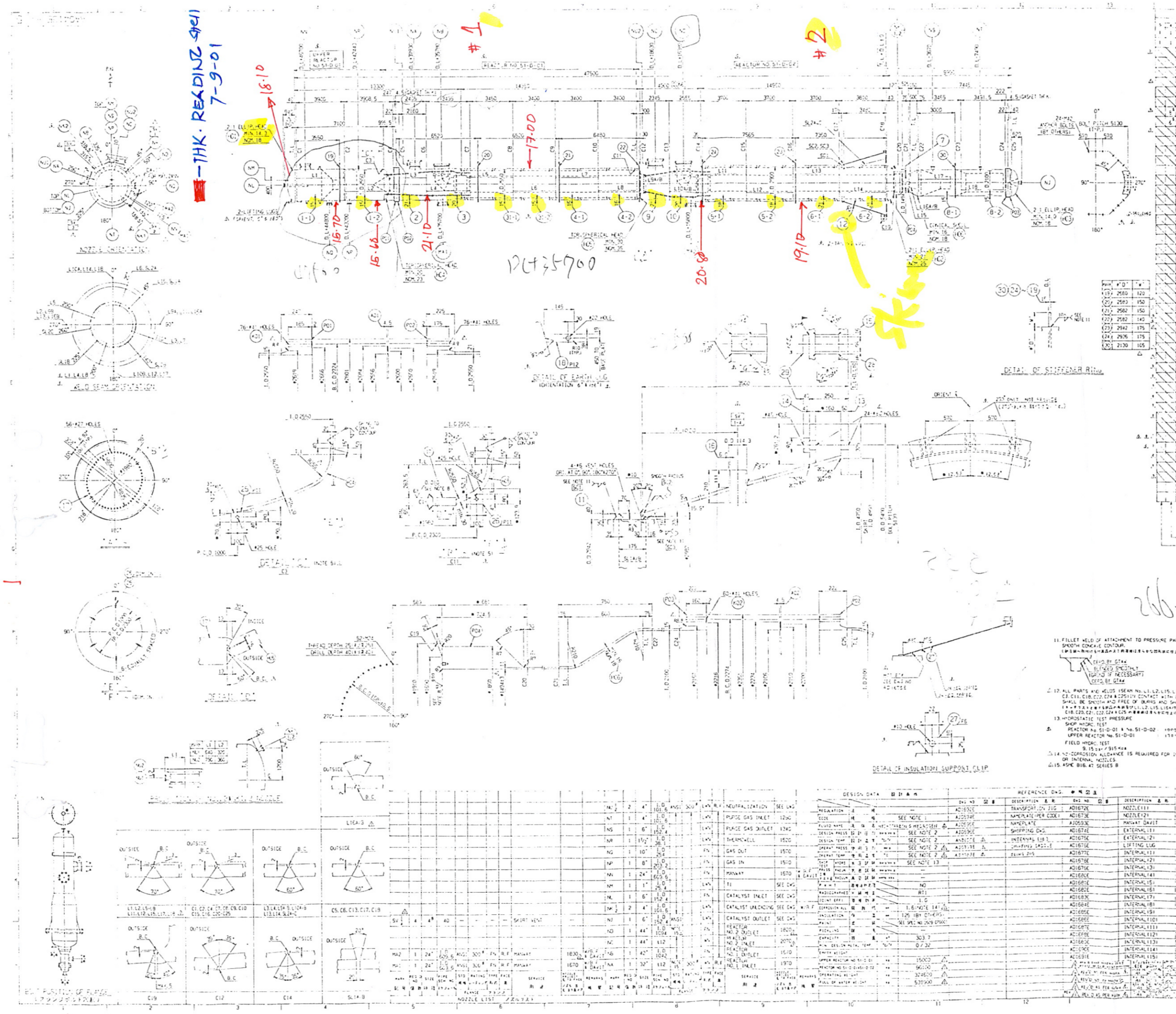

L/2R UPPER REACTOR NO. 51-D-01 — Σ W1 = 92323 kg

SHIPPED LOOSE PARTS — Σ W2 = 11527 kg

SPARE PARTS FOR CONSTRUCTION & PRE-COMMISSIONING — Σ W3 = 461 kg

SPARE PARTS FOR COMMISSIONING — Σ W4 = 65 kg

Σ W5 = — kg

NOTES

1. APPLICABLE CODE
ASME BOILER AND PRESSURE VESSEL CODE SECT. VIII DIV. 1 1995 ED.
ASME CODE STAMPING IS REQUIRED.

2. DESIGN PRESSURE & DESIGN TEMPERATURE

		UPPER REACTOR NO. 51-D-01	REACTOR NO. 51-D-01	REACTOR NO. 51-D-02
DESIGN PRESS.	bar (kPa)	5.3 (F.V.) (530) (F.V.)	6.7 (F.V.) (670) (F.V.)	6.1 (F.V.) (610) (F.V.)
	PSIG	100.0	97.1	88.4
DESIGN TEMP.	°C (°F)	579/399 (1074.2/750.2)		
OPERATING PRESS.	bar (kPa)	2.48 (248)	2.49 (249)	2.12 (212)
OPERATING TEMP.	°C (°F)	579 (1074.2)		

3. DIMENSIONS MARKED BY ● ARE FABRICATION REFERENCE.

4. THE MARK "B.C" ON THIS DWG. STANDS FOR BACK CHIPPING.

5. INTERMEDIATE HEAD DIMENSIONS ARE AS FOLLOWS.

	DIAMETER	INSIDE RADIUS OF DISH	INSIDE RADIUS OF CORNER	INSIDE DEPTH OF DISH
UPPER REACTOR NO. 51-D-01	O.D 2550	2550	255	484.3
REACTOR NO. 51-D-01	O.D 2550	2550	255	479.8

6. GASKET MATERIAL
FILLER : GRAPHITE
(FILLER SHALL BE INHIBITING GRAPHITE, AND OUTER 3 WINDINGS SHALL CONTAIN A FILLER MATERIAL WHICH PROVIDES AN OXIDATION BARRIER FOR THE GRAPHITE)
HOOP : INCOLOY 800
INNER RING : TP.347S.S
OUTER RING : TP.347S.S

7. THE GASKET CONTACT SURFACE OF SHELL FLANGES & NOZZLE FLANGES SHALL HAVE A NOMINAL 125Ra FINISH (MIN. 125Ra, MAX. 250Ra)
NOM. 125Ra (MIN. 125Ra, MAX. 250Ra)

8. THE GASKET CONTACT SURFACE SPECIFIED BY SURFACE TEXTURE SYMBOL SHALL HAVE A FINISH SPECIFIED BELOW.
NOMINAL AARH : 63 μ INCH (MIN. 32 μ INCH, MAX. 125 μ INCH)
MAX. ALLOWABLE WAVINESS HEIGHT : W = 0.010 INCH AND

9. THE SURFACE OF WELD WHICH WELDS ARE CONTACTED TO THE SCALLOP SHALL BE GROUND TO FLUSH WITH INSIDE OF SHELL.
L4, L5, L6, L7, L8, L11, L12, L13, L14
C7, C8, C9, C10, C15, C16, C17

10. WELDING SEAM NO. C20 SHALL BE GROUND TO SMOOTH CONTOUR ON BOTH INSIDE AND OUTSIDE SURFACE.

11. FILLET WELD OF ATTACHMENT TO PRESSURE PARTS SHALL HAVE A SMOOTH CONCAVE CONTOUR.
DEPO. BY GTAW
BLENDED SMOOTHLY (GRIND IF NECESSARY)
DEPO. BY GTAW

12. ALL PARTS AND WELDS (SEAM No. L1, L2, L15, L16A/B, L17, L18, C3, C11, C18, C22, C24 & C25) IN CONTACT WITH CATALYST SHALL BE SMOOTH AND FREE OF BURRS AND SHARP EDGES.
L1, L2, L15, L16A/B, L17, L18, C3, C11, C18, C20, C21, C22, C24 & C25

13. HYDROSTATIC TEST PRESSURE
SHOP HYDRO. TEST
REACTOR No. 51-D-01 & No. 51-D-02 : 1005 kPa
UPPER REACTOR No. 51-D-01 : 1701 kPa
FIELD HYDRO. TEST
9.15 bar / 915 kPa

14. NO CORROSION ALLOWANCE IS REQUIRED FOR INTERNAL HEAD OR INTERNAL NOZZLES.

15. ASME B16.47 SERIES B

CHIYODA CORPORATION
JOB NO 51046 BTX PROJECT
PO NO SAYPOA0009
REQ NO MR-51-D-001
IDENT NO 51-D-01/02-ENC002

PURCHASER'S PERMISSION TO PROCEED OR REVIEW TAKEN ON VENDOR PRINTS SHALL NOT RELIEVE VENDOR FROM ITS RESPONSIBILITIES OR LIABILITIES UNDER PURCHASE ORDER

PRELIMINARY
FOR APPROVAL
RELEASE

U

CUSTOMER'S PURCHASE ORDER NO.
SAYPOA0009

REV. 5

SCALE 1/30, 1/10, 1/5 DATE MAY 27 '96

51-D-01/51-D-02
CYCLAR REACTOR NO.1/NO.2
ASSEMBLY

SUMITOMO HEAVY INDUSTRIES, LTD.
TOKYO, JAPAN

AA04136

CHIYODA CORPORATION

FOR RECORD

CLIENT : IBN RUSHD
PROJECT PTA & AROMATICS -
TITLE : AROMATICS
JOB NO. : 51046
DOC. NO.: DS-51-D-009 (1/1)

		REVISIONS			
MARK		1	2	3	4
APRD					
CHKD					
MADE	K. Takahashi	K. Takahashi	K. Takahashi	K. Takahashi	
DATE	Mar. 05 '96	Mar. 27 '96	Jun. 20 '96	Jan. 30 '97	

uop
25 East Algonquin Road • Des Plaines, Illinois 60017-5017 • USA

VESSELS

PROJECT SPECIFICATION
560689 - 301 - 0 SHEET 11

REV	DATE	BY	APVD	REV	DATE	BY	APVD
0	5-26-95						

SERVICE: LOW PRESSURE SEPARATOR

ITEM NO ~~D-5105~~ 51-D-09

Design Conditions At Top	INT 3.5 BAR (g)	@	125 °C
	EXT FULL VACUUM	@	35 °C
	Metal Temperature (Min)		9 °C
Operating Conditions			35 °C
			°C
Radiograph			MR
Postweld Heat Treat			MR
Joint Efficiency			MR%

Material Specifications

Heads	SA516-60
Shell	SA516-60

Shell	Thickness Reqd By Code-mm	+ Corrosion Allowance mm (Min)
		3
Heads		
		3

Vessel Heads TOP = 2:1 ELLIPTICAL
BOTTOM = 2:1 ELLIPTICAL

Accessories Applied by Fabricator

Ladder & Platform Clips	AS REQUIRED (*)
Insulation Clips & Rings	NO
Vessel Support	YES

Nozzles and Manways

Mark	No	Size Inches	Service	
AO	1	60	VAPOR OUT	(+), C
BB	1	24	MANWAY	
BJ	2	36	INLET	(+), C
BL	2	1 1/2	LEVEL	
BO	2	36	INLET	(+), C
BR	2	1	LLS	
BS	2	1	HHS	
BX	2	1 ID	TI	
CD	1	8	OUTLET	

Class- ANSI CL150 (+)- SHEET 2-NOTE A

Facing- RAISED FACE
C- BEVEL FOR WELDING (OPTIONAL)

Normal Liquid Level - 620 mm ABOVE BOTTOM TANGENT
Specific Gravity = 0.862

(*) BY CONTRACTOR

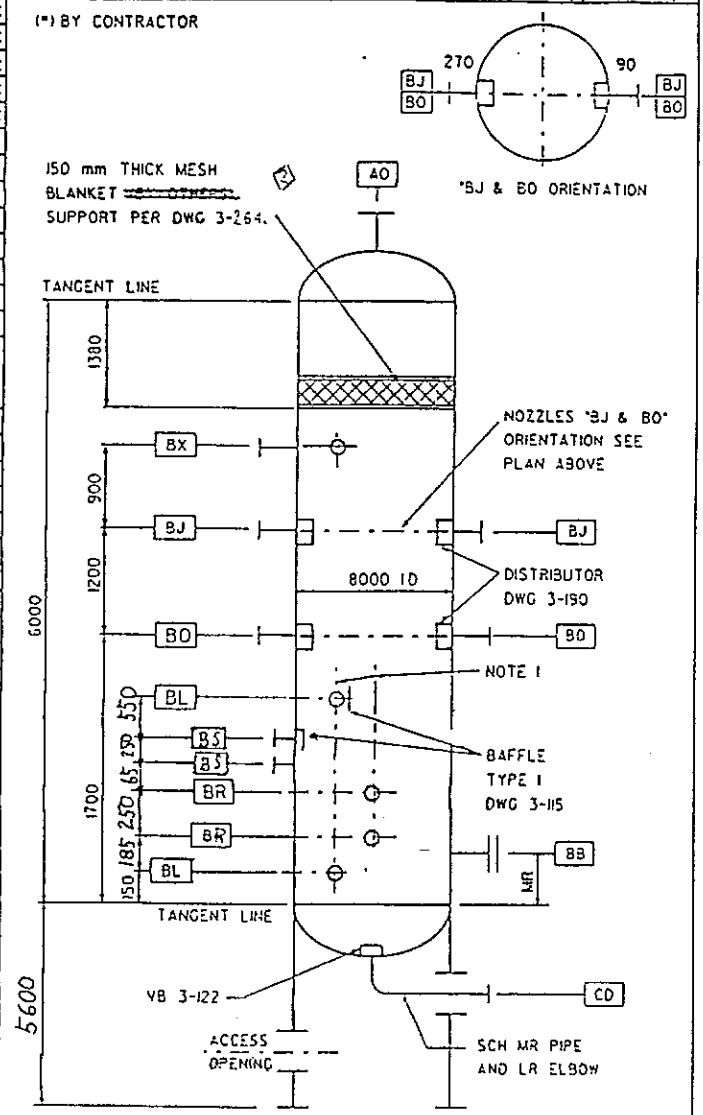

NOTES:
1) DO NOT LOCATE IN NOZZLE "BJ & BO" AREA.

Drawings Referred to in this Specification

3-115-2	3-122-0	3-190-4	3-264-0		

560689v109.dgn

59

509157

3RD ANGLE PROJECTION

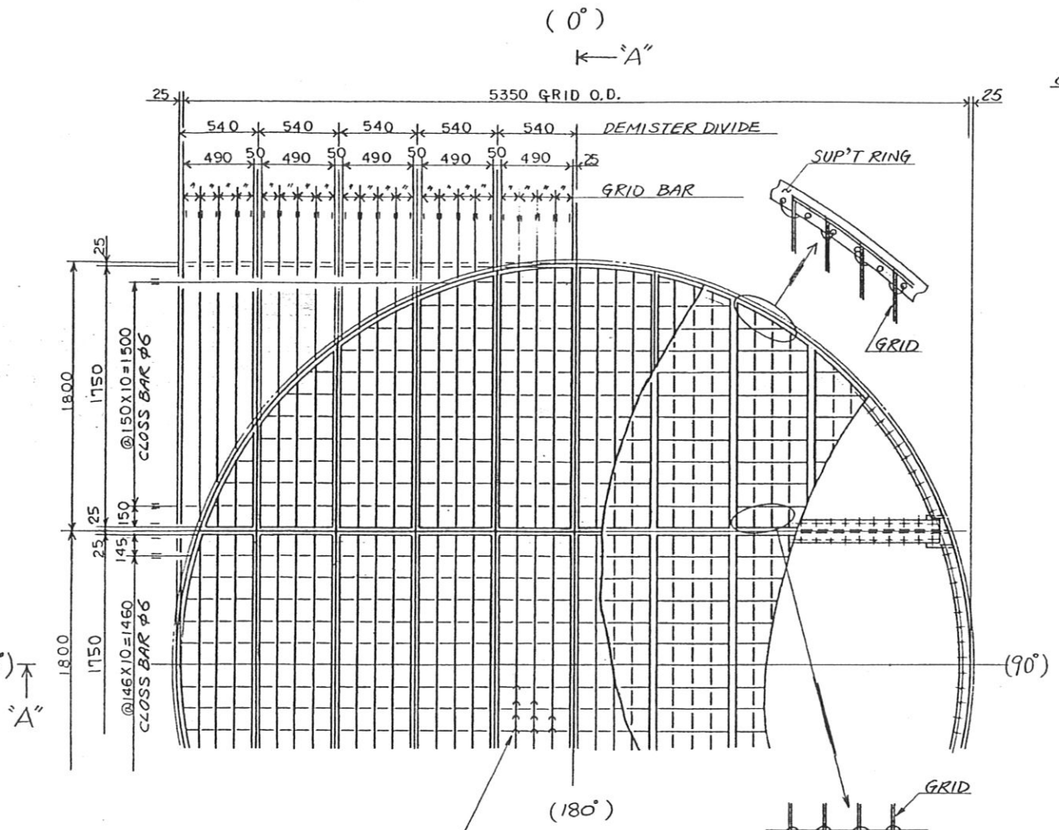

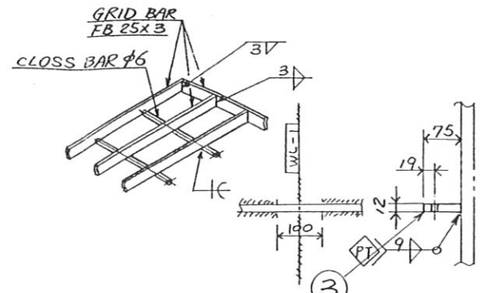

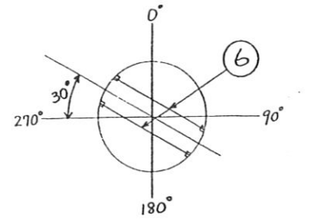

DEMISTER ORIENTATION

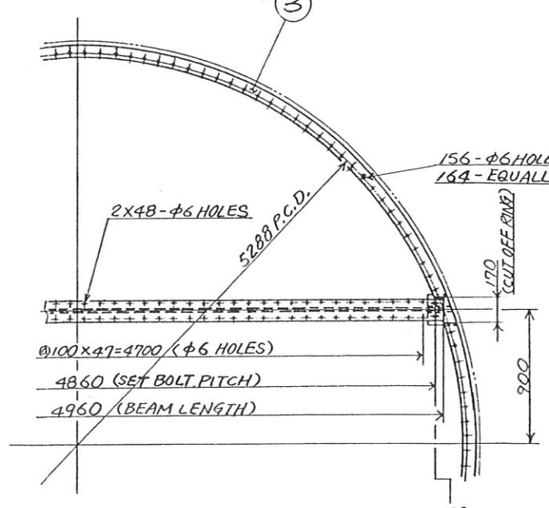

NOTE

1. DEMISTER SPECIFICATION
   DENSITY : 9 lb/ft³ (144.2 kg/m³)
   FILAMENT WIRE : 0.011" (0.28 mm)
   } YORK 431 or EQ. ◇ (N-STYLE)

◇ 2. TOTAL WEIGHT OF MESH BLANKET = 655 kg. (INCLDING GRID BARS)

◇ 2. ALL MESH BLANKET SECTIONS MUST BE ABLE TO PASS THROUGH MANWAY BB (24" ND) LOCATED BELOW THE MESH BLANKET.

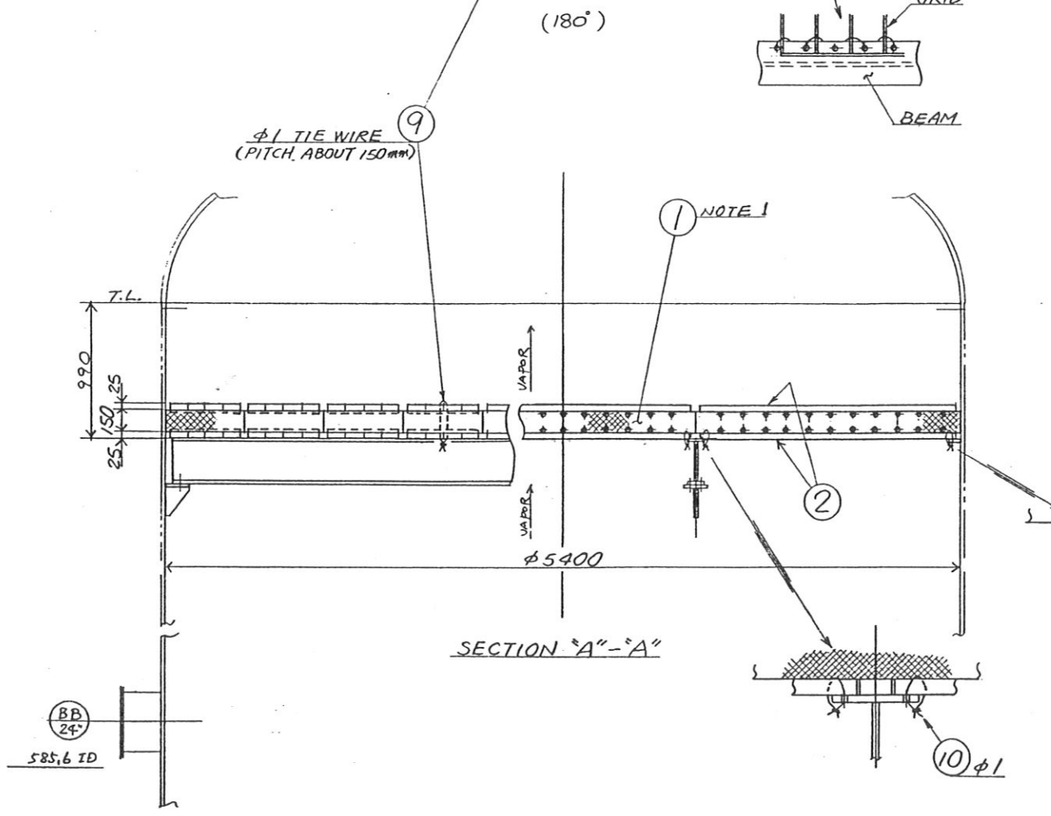

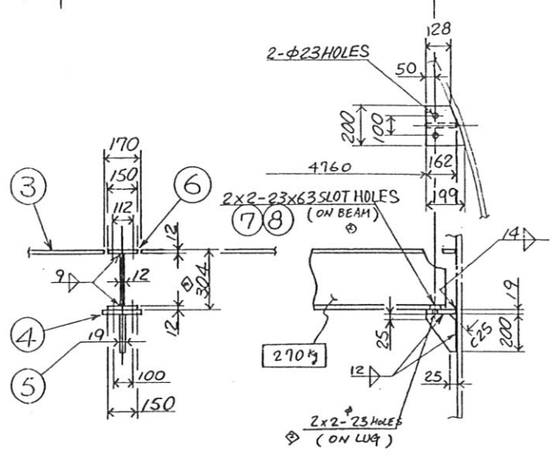

PART NO.	DESIGNATION	MATERIAL	MILL SHEET	QUANT	TOTAL QUANT	REMARKS
28						
27						
26						
25						
24						
23						
22						
21						
20						
19						
18						
17						
16						
15						
14						
13						
12						
11	TIE WIRE φ1	TYP304S.S.		1 SET	47 M	
10	↕ ↕	↕		1 SET	20 M	
9	TIE WIRE φ1			1 SET		
8	WASHER FOR 3/4"	↓		8		
7	HEX. BOLT NUT 3/4-10UNCX60L	TYP304S.S.		8 SETS		NUT TYPE 1
6	BEAM t12	SA283-C		2 SETS		BUILT-UP
5	SUPPORT RIB t19	SA516-70 ◇		4		
4	SUPPORT LUG t19	SA516-70 ◇		4		
3	SUPPORT RING t12	SA516-70 ◇		1 RING		
2	GRID FB25X3 & 22	TYP304S.S.		2 SETS		
1	DEMISTER t150	TYP304S.S.		1 SET	30 DIVIDE	

MARK O. NIHONMESH Co., LTD.

REV.	DESCRIPTION	DATE	APPROVE	CHECK	DRAWN
◇					
◇					
◇					
◇					
◇	⑥ 300→304 (USE OF FLAT BAR)	NOV. 27 '96	N. Ohsawa		
◇	ORI. WEIGHT etc	Sep. 17 '96	N. Ohsawa		
◇	SA283-C→SA516-70	NOV. 13 '96	N. Ohsawa	Shirai	Y.S.

Reviewed by QA
Date: SEP. 17 '96
T. Tokeda
TOKKI LTD

U STAMP
TM JOB NO. 96-1583
MFGR'S S/N TM-1237

Approved By Design Section
Date: Sep. 17 '96
Manager of Design Section

CHIYODA CORPORATION
JOB NO. 51046 IBN RUSHD AROMATICS PROJECT
PO NO. SAYPOA 0022
REQ NO. MR-50-D-008
IDENT NO. 51-D-10-DW-0005 ◇3
A-NO COMMENTS PROCEED WITH FABRICATION
B-PROCEED WITH FABRICATION COMMENTS TO BE CONSIDERED
C-DO NOT PROCEED WITH FABRICATION
SAT TEAM
DATE
PURCHASER'S PERMISSION TO PROCEED OR REVIEW TAKEN ON VENDOR PRINTS SHALL NOT RELIEVE VENDOR FROM ITS RESPONSIBILITIES OR LIABILITIES UNDER PURCHASE ORDER

CUSTOMER	ARABIAN INDUSTRIAL FIBERS COMPANY		
TMC JOB NO.	1583		
MICRO		QUANT	1 (ONE)
APPR		DATE	JUN. 18 '96
CHECK	Y. Shirai	SCALE	1/20 1/15
DRAWN	K. Sugita	GROUP	

TOKKI LTD. YAMAGUCHI JAPAN

IBN RUSHD AROMATICS PROJECT

51-D-10
HIGH PRESSURE SEPARATOR

DETAIL OF DEMISTER

DWG. NO. TS-4584-05 REV. ◇3 ISSUED

007268

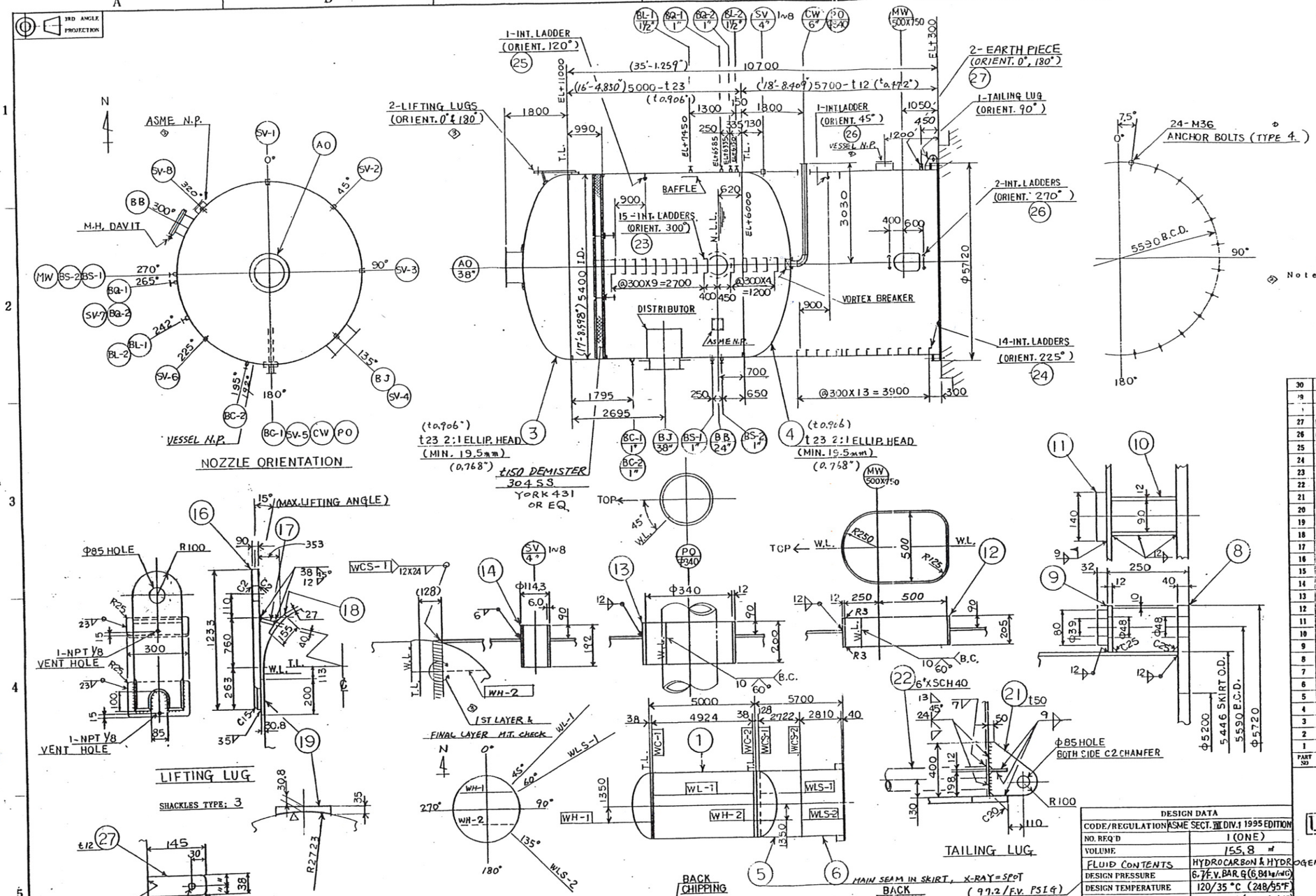

Note;

(1) Carbon content of all carbon stell parts shall be limited to 0.25% Max.

(2) Hydro. test metal temp. MIN. 5°C (41° F)

PART NO	DESIGNATION	MATERIAL	SHEET	QUANT	TOTAL QUANT	REMARKS
30						
29						
28						
27	EARTH PIECE t 12	SA240-304		Φ	2	
26	INTERNAL LADDER Φ19	SA36			3	
25	INTERNAL LADDER Φ19	SA36			1	
24	↕	↕			14	
23	INTERNAL LADDER Φ19	SA36			15	
22	STAY 6"X SCH40	SA106-B			1	
21	TAILING LUG t50	SA283-C			1	
20						
19	PAD	SA516-70			2	ORIGINAL t35
18	PAD t27	SA516-70			2	
17	GUSSET t40	SA516-70N			2	
16	LIFTING LUG t90	SA516-70N			2	
15						
14	SKIRT VENT 4" X SCH40	SA106-B			8	
13	PIPE OPENING t12	SA283-C			1	
12	ACCESS OPENING t12	↕			1	
11	WASHER t32				24	
10	GUSSET t12				48	
9	COMPRESSION RING t12	↓			1	
8	BASE PLATE t40	SA283-C	△		1	
7						
6	SKIRT t12	SA283-C	△		1	
5	SKIRT t12	SA283-C	△		1	
4	HEAD t23	SA516-70	△		1	NORMALIZING ◇
3	HEAD t23	SA516-70	△		1	NORMALIZING ◇
2					1	
1	SHELL t23	SA516-70	△		1	

MARK	SIZE	NO.OF REQ'D	ANSI'D RATING	TYPE	FACING	SCH (THK)	SERVICE	TO L PROJECTION	
SV 1/8	4"	8	—	—	—	40	SKIRT VENT	—	
PO	Φ340	1	—	—	—	t12	PIPE OPENING	—	
MW	500X750	1	—	—	—	t12	ACCESS OPENING	—	
CW	6"	1	150	WN	RF	80	OUTLET LIQ.	SEE DWG.	300 OD x 23t
BS-1/2	1"	2	↕	LWN	↕	—	HHS	2880	—
BQ-1/2	1"	2	↕	↕	↕	—	LLS	↕	—
BL-1/2	1 1/2"	2	150	LWN		—	LEVEL	2880	—
BJ	38"	1	ASME B16.47 A Φ 150	WN		t12	INLET	3130 SERIES B	1700 OD x 23t
BC-1/2	1"	2	150	LWN		—	TI 1D	2880	—
BB	24"	1	150	WN		t12	MANWAY (W/DAVIT)	3030	1150 OD x 23t
AO	38"	1	ASME B16.47 A Φ 150	WN	RF	t12	OUTLET VAPOR	SEE DWG. SERIES B	1700 OD x 23t

NOZZLE LIST

REV.	DESCRIPTION	DATE	APPROVE	CHECK	DRAWN
◇					
◇					
◇					
◇	MDMT = -42.2°F → -35.6°F ASD NOTE (3)	12-6-'96		J.Shirai	J.S
◇	DECID LIFTING LUG ORI.	10-21-'96		J.Shirai	J.S
◇	N.P. POSITION etc	9-21-'96		J.Shirai	J.S
◇	FOLLOW CHIYODA'S COMMENT.	7-30-'96		J.Shirai	J.S

DETAIL OF NAME PLATE	TS-4582-06
DETAIL OF FIRE PROOF CLIP	TS-4584-08
PLATFORM LUG	-07
PIPE SUP'T LUG	-06
DEMISTER	-05
MANHOLE	-04
DETAIL OF NOZZLE	TS-4584-02
TITLE	DRAWING NO.

LIST OF REFERENCE DRAWINGS

DESIGN DATA	
CODE/REGULATION	ASME SECT. VIII DIV.1 1995 EDITION
NO. REQ'D	1 (ONE)
VOLUME	155.8 m³
FLUID CONTENTS	HYDROCARBON & HYDROGEN. ◇
DESIGN PRESSURE	6.7 F.V. BAR.G (6.84 kg/cm²G)
DESIGN TEMPERATURE	120/35 °C (248/95°F)
OPERATING PRESSURE	BAR.G (kg/cm²G)
OPERATING TEMPERATURE	35°C (95°F)
HYDRO. TEST PRESSURE	10.1 BAR.G (10.3 kg/cm²G)
PNEUMA. TEST PRESSURE	— BAR.G (— kg/cm²G)
POST WELD HEAT TREATMENT	NO
RADIOGRAPHED	SHELL: SPOT/HEAD: FULL
JOINT EFFICIENCY	SHELL: 0.85 /HEAD: 1.0
CORR. ALLOWANCE	3 mm
FLUID SP. GRAVITY	0.823
INSULATION	NO ~~YES~~ (— mm)
FIRE PROOF (BOTH SIDE)	~~NO~~ YES (75 mm)
PAINTING SYSTEM	
ACCESSORY	
SPARE	GASKET: 200% / BOLT & NUT: 10% (2 SETS)
MDMT ◇	+2°C (+35.6°F)
IMPACT TEST	NO.
WEIGHT: ERECTION	42000 kg
WEIGHT: EMPTY (AT SHOP DRAWN)	90400 kg
WEIGHT: OPERATING	119000 kg
WEIGHT: FULL WATER (AT FIELD)	246100 kg

U STAMP

10.9 BAR.G (11.1 kg/cm²G) AT SHOP

(146.5 PSIG)

Reviewed by QC Date: SEP 17 '96 TOKKI LTD

U STAMP — TMC JOB NO. 96-1583 — NOTIFIED BY TM-1237

Approved By Design Section Date: SEP. 17 '96 Manager of Design Section

CHIYODA CORPORATION
JOB NO. 51046 IBN RUSHD AROMATICS PROJECT
PO NO. SAY PO A00022
REQ NO. MR-50-D-008
IDENT NO. 51-D-10-DW0001
A-NO COMMENTS PROCEED WITH FABRICATION
B-PROCEED WITH FABRICATION COMMENTS TO BE CONSIDERED
C-DO NOT PROCEED WITH FABRICATION
SAY TEAM — DATE
PURCHASER'S PERMISSION TO PROCEED OR REVIEW TAKEN ON VENDOR PRINTS SHALL NOT RELIEVE VENDOR FROM ITS RESPONSIBILITIES OR LIABILITIES UNDER PURCHASE ORDER

CUSTOMER	ARABIAN INDUSTRIAL FIBERS COMPANY	TOKKI LTD. YAMAGUCHI JAPAN	
TMC JOB NO.	1583	IBN RUSHD AROMATICS PROJECT	
MICRO	QUANT 1 (ONE)	51-D-10	
APP'R	DATE JUN. 20' 96	HIGH PRESSURE SEPARATOR	
CHECK	J.Shirai SCALE 1/60	ASSEMBLY DRAWING	
DRAWN	S.F. GROUP	DWG. NO. TS-4584-01	REV. ◇ ISSUED

007265

B/M SHEET NO. 2R1

ORDER NO. 56-050-2 DWG No.: 56-050-2 SHT#2 4

ITEM	QTY	DESCRIPTION AND SIZE	MAT'L	ADV	REV
2-1	2	3900(153 9/16") O.D. X 21(13/16") MIN. THK ASME • ◀	SA-516-70	A1	
		2:1 ELLIP. HEAD W/ 51(2") S.F. PER ASME VIII-			
		DIV 1 UG-79, 81 & UCS-79 EDGE PREP. PER SK "A",			
		DET "B6", REV. 1			
2-2	6	PL 21(13/16") X 2870(9'-5") X 12189(39'-11 7/8") •	SA-516-70	A2	1
		LG. C/F (6) PL 21(13/16") X 2896(114") X 12243			
		(482") LG.			
2-3	1	PL 21(13/16") X 2777(9'-1 5/16") X 12189(39'-11 7/8") •	SA-516-70	A2A	1
		LG. C/F (1) PL 21(13/16") X 2896(114") X 13462			
		(530") LG.			
		• PER SPEC #PV402-A, PARA. 2.1.6, 2.2.2, 2.2.3.			
		◀ CERTIFICATES TYPE REQUIRED IS DIN 50049-3.1-B			

B/M SHOWN FOR ONE VESSEL; ONE VESSEL REQUIRED.

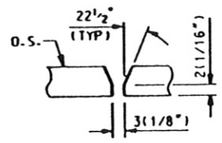

CIRCUM CLOSING SEAM

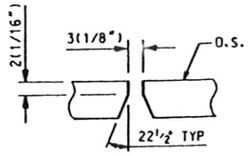

TYP LONG & CIRCUM SEAM U.N.

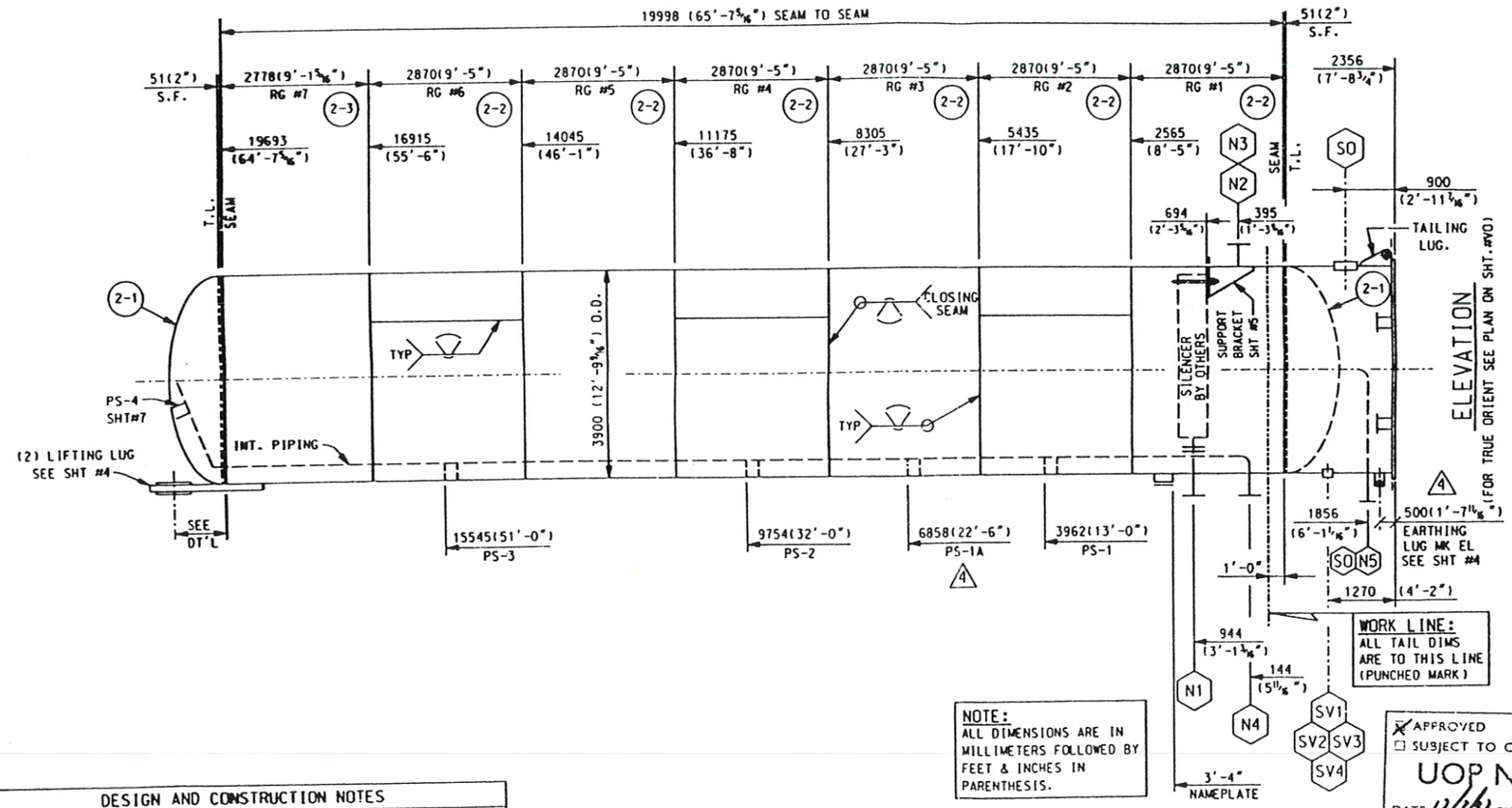

WORK LINE: ALL TAIL DIMS ARE TO THIS LINE (PUNCHED MARK)

NOTE: ALL DIMENSIONS ARE IN MILLIMETERS FOLLOWED BY FEET & INCHES IN PARENTHESIS.

RETURNED MAR - 7. 1997 CHIYODA V P C

RECVD FEB 24 1997 CHIYODA VPC

AS BUILT

CHIYODA CORPORATION

JOB NO.	51046 BN RUSD AROMATICS PROJECT
PO NO.	SAYPOA0020
REQ NO.	MR-51-Y-002
IDENT. NO.	51-Y-01-DW 0101

PURCHASER'S PERMISSION TO PROCEED OR REVIEW TAKEN ON VENDOR PRINTS SHALL NOT RELIEVE VENDOR FROM ITS RESPONSIBILITIES OR LIABILITIES UNDER PURCHASE ORDER

P.O. #64T139702

X APPROVED
☐ SUBJECT TO COMMENTS
UOP N.V.
DATE 12/2/97 BY

NO.	DATE	BY	CHK	REVISIONS
3	12-9 96	BT	BOB	REVISED AS NOTED SEE DRR-3
4	2-15 97	BT	BOB	FINAL AS BUILT- SEE DRR-4

DESIGN AND CONSTRUCTION NOTES

1. DESIGN PER ASME CODE: SECTION VIII DIV 1. 95 ED. A95
2. STRESS RELIEVING: N/A
3. RADIOGRAPH: 100%
4. JOINT EFFICIENCY: HEAD 1.0 SHELL 1.0
5. CORR. ALLOW.: HEAD 1.5(1/16") SHELL 1.5(1/16") NOZZS 1.5(1/16")
6. MIN. DESIGN METAL TEMP.: 9 °C (49 °F)
7. INT DSG PRESS: 11 BARG(159 PSI) @ 120°C(248°F)
   EXT DSG PRESS: 0 BARG(0 PSI) @ 148°C(300°F)
8. M.A.W.P.: 11.8 BARG(171 PSI): MAP(N & C): 12.8 BARG(186 PSI)
9. OPER. PRESS. 4.7 BARG(68) PSI @ 37°C (99) °F
10. HYDROSTATIC TEST PRESS. 19.2 BARG(279 PSI)
11. PAINT: YES. SEE DWG 56-050-2 SHT #9

SCHEDULE OF OPENINGS

MARK	QTY	SIZE	SERVICE	DWG #	MARK	QTY	SIZE	SERVICE	DWG #
N1	1	12" -150# RF	INLET	SHT #5					
N2	1	24" -150# RF	MANWAY W/ DAVIT	SHT #5					
N3	1	2" -150# RF	OUTLET	SHT #5					
N4	1	2" -150# RF	VENT	SHT #7					
N5	1	2" -150# RF	DRAIN	SHT #6					
SO	2	21 1/4" X 31 7/8"	SKIRT OPENING	SHT #3					
SV1 THRU SV4	4	4"	SKIRT VENTS	SHT #3					
SS	1	4"	SKIRT SLEEVE F/ NOZZ N5	SHT #6					

ORDER NO. 56-050-2

GRAVER TANK & MFG. CO. INC.

(1) 3859 (151 15/16") I.D. X 20100 (65'-11 5/16") T/T VERT P/V (SURGE DRUM) ITEM NO.: 51-D-23

ELEVATION

DWN: BT 8-20-96	CUST: UOP / IBN RUSHD YANBU, SAUDI ARABIA
CHK: MB 9-13-96	56-050-2 SHT#2 — DWG. NO. — REV. 4

MASTER FILE: ELEV

AS BUILT

24" - 12" -

CHIYODA CORPORATION

52-D-31.XLS
Mar.25,1996

FOR RECORD

DRUM SPECIFICATION SHEET

CLIENT Arabian Industrial Fibers Company
PROJECT
TITLE Saudi Aromatics Yanbu Projct
JOB NO. 51046
DOC.NO. DS-52-D-031 (1 / 1)

REV	5	3	4	MADE	
BY	Y. Nile	1	Schot	MADE	A.F.
CHKD		J.T.	J.T.	CHKD	J.T.
APVD			G.F.	APVD	G.F.
DATE	Feb.21,'91	7/19,'96	Oct.22,'96	DATE	Mar.,14,'96

ITEM NO.: 52-D-31
SERVICE : CONDENSATE DRUM FOR 52-KS-01
NO. REQD.: 1

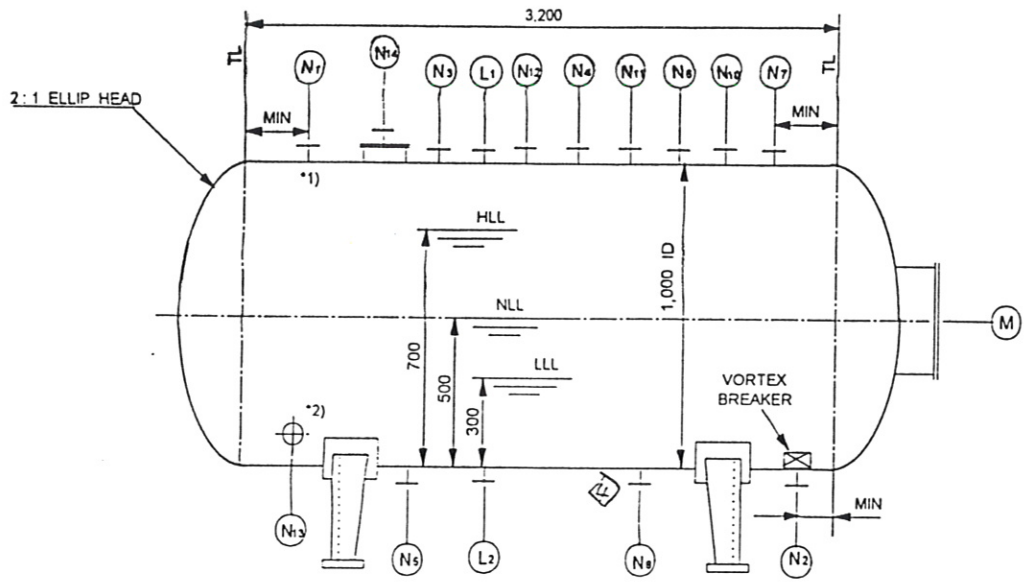

*2) BELOW LLL.
*1) FOR INTERNAL OF N1 NOZZLE, REFER TO UOP STD DWG. 3-190-4.

OPERATING CONDITION			
FLUID :	CONDENSATE		
PRESSURE :	-0.86		BarG
TEMPERATURE :	54		°C
LIQUID DENSITY :	987		Kg/m³
TOTAL VOLUME :	2.8		m³
NORMAL LIQUID HOLD-UP :	1.4 m³	2.5	min.
CONTROL RANGE REQUIRED :	2.6 min.,	400	mm

DESIGN CONDITION			
CODE/REGULATION :	(ASME Sec. VIII div.1 , 1995) 5		
INSIDE DIA. & TL-TL LENGTH :	1,000 mm,	3,200	mm
DESIGN PRESS. & TEMP. :	1.5/FV BarG	180	°C
TEST PRESS. HYDROSTATIC :	(18.22) 5		BarG
PNEUMATIC :	—		BarG
CORROSION ALLOWANCE :	3.0		mm
POSTWELD HEAT TREATMENT : ■ CODE	☐ YES	☐ NO	
RADIOGRAPHI ☐ FULL ☐ SPOT	%,	☐ NO	■ CODE
JOINT EFF. : SHELL	%, HEAD		%

MATERIAL	
SHELL :	SA516-70
HEAD :	SA516-70 5
~~TRAY~~/INTERNAL :	CS
SUPPORT :	CS
NOZZLE FRANGE :	SA105
NECK :	
GASKET :	SWG (Non Asbst)
BOLT & NUT : EXT.	INT.
INSULATION : ■ NO	☐ HOT ☐ COLD ☐ PP mm
FIRE PROOF :	☐ YES ■ NO

REMARKS

MARK	SIZE	SERVICE	Q'TY	RATING
L_{12}	2"	LT / LG	2	150# RF
M	20"	MANHOLE	1	150# RF
N_{14}	4"X2"	VENT	1	150# RF
N_{13}	1"	TI	1	150# RF
N_{12}	3"	LINE DRAIN	1	150# RF
N_{11}	1 1/2"	DWN INLET	1	150# RF
N_{10}	3"	PUMP VENT	1	150# RF
				4
N_8	2"	COND RTN	1	150# RF
N_7	1"	PG	1	150# RF
N_6	2"	MIN FLOW	1	150# RF
N_5	2"	DRAIN	1	150# RF
N_4	3"	EQUALIZING	1	150# RF
N_3	2"	EJECTOR CONN.	1	150# RF
N_2	6"	CONDENSATE OUTLET	1	150# RF
N_1	6"	CONDENSATE INLET*1)	1	150# RF

NOZZLE SCHEDULE

WEIGHT :			
ELECTION	1,811	Kg	5
OPERATION	4,135	Kg	
FULL WATER	4,941	Kg	

ACCESSORIES SUPPLIED BY MANUFACTURER

~~LADDER & PLATFORM CLIPS~~, ~~PIPE SPRT CLIPS~~, ~~DAVID~~, ~~LIFTING LUG~~, ~~CORROSION CAGE POINT~~, EARTH PIECE, INTERNAL LADDER (SHELL, ~~SKIRT~~), ~~TEMPLATE~~, ANCHOR ~~OR SETTING~~ BOLTS, ~~SLIDING PLATE~~,

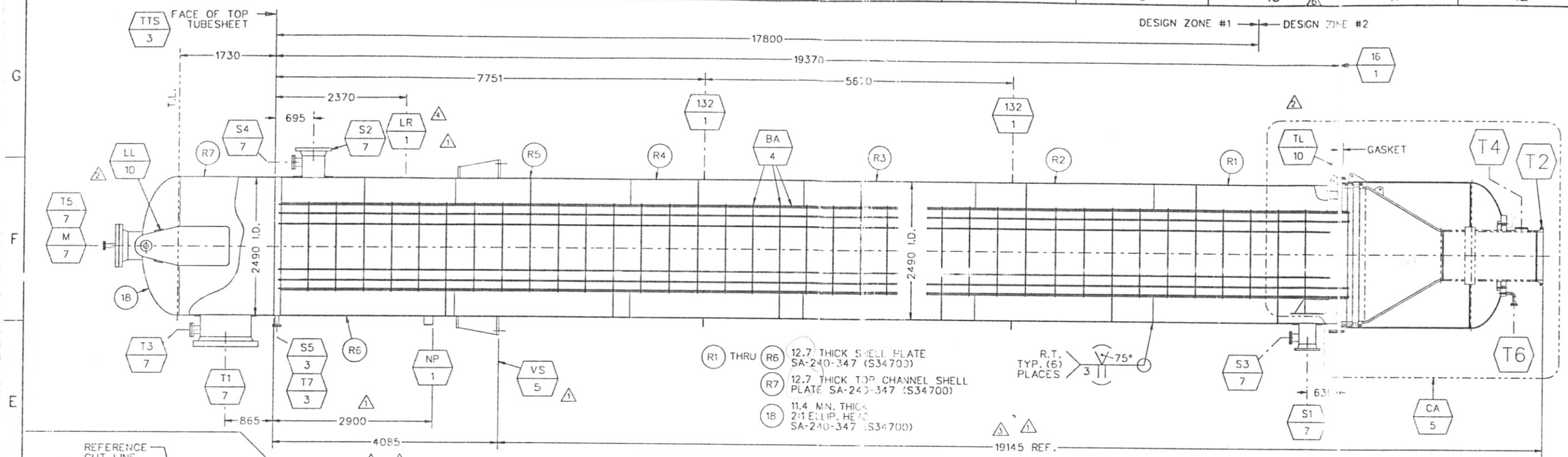

GENERAL NOTES

1. ALL BOLT HOLES ARE EQ. SPACED & STRADDLE NATURAL C'LINES.
2. BASIC MATERIALS OF CONSTRUCTION:
   SA-240-347 (S34700) (.04 MIN. CARBON)
   SHELL COVER & FLOATING CONE ASSY.: SA-516-70 (.25 MAX. CARBON)
3. AFTER COMPLETION OF TUBE BUNDLE, AIR TEST THE SHELL SIDE TO 25 PSIG (1.80 BAR(g)).
4. HELIUM MASS SPECTROMETER TEST SHELL SIDE AT 15 PSIG (1.07 BAR(g)).
5. SHELL SIDE: 129 PSIG (8.9 BAR(g)) & F.V.
   TUBE SIDE: 58 PSIG (4.0 BAR(g)) & F.V.
6. DESIGN ZONE #1:
   SHELL SIDE (INT.): 941°F. (505°C.)
   TUBE SIDE (INT.): 1022°F. (550°C.)
   FULL VAC.: 752°F. (400°C.)
   DESIGN ZONE #2:
   SHELL SIDE (INT.): 550°F. (288°C.)
   TUBE SIDE (INT.): 550°F. (288°C.)
   FULL VAC.: 752°F. (400°C.)
7. SANDBLAST ALL EXTERNAL CARBON STEEL PER SSPC, SP-10, NEAR WHITE, AND PAINT WITH ONE COAT OF CARBOZINC #11 PRIMER.
4. SOLVENT CLEAN EXTERNAL STAINLESS STEEL PER SSPC, SP-1, AND PAINT WITH (2) COATS (1.5-2.0 MILS) OF DAMPNEY THERMALOX 70C.
8. IMMEDIATELY AFTER WELDING, INDIVIDUALLY PRESSURE TEST EACH BACKSIDE WELDED TUBE TO TUBESHEET JOINT WITH 100% HELIUM AT 50 P.S.I.G.
9. DYE-PENETRANT EXAMINATION 10% OF THE LENGTH OF ALL NON-PRESSURE ATTACHMENT WELDS TO PRESSURE PARTS.
10. MAXIMUM FUTURE FIELD HYDRO TEST:
    SHELL SIDE: 167 PSIG (11.5 BAR(G)) (AT TOP OF SHELL)
    (LIMITED BY SHELL COVER BODY FLANGE)
    TUBE SIDE: 87 PSIG (6.0 BAR(G)) (AT MANWAY "M")
    (LIMITED BY DESIGN)
1

DESIGN	SHELL SIDE	TUBE SIDE
CODE	1995 ASME SECT VIII DIV. 1	
LATEST ADDENDA	ORIGINAL ISSUE & TEMA "R" (7TH ED.)	
MAX. DESIGN PRESS.	SEE NOTE #5	SEE NOTE #6
MAX. DESIGN TEMP.	SEE NOTE #6	SEE NOTE #6
JOINT EFF. HEADS	SEAMLESS	100%
JOINT EFF. SHELL	100% / 85%	100%
CORR. ALLOWANCE	4 1/8" (3mm) CARBON STEEL	
AIR TEST	162 PSIG (11.2 BAR(G))	73 PSIG (5.0 BAR(G))
LIMITED BY	DESIGN	DESIGN
HEAT TREATMENT	NONE	NONE
RADIOGRAPHY:		
SHELL LONG SEAMS	FULL / SPOT X-RAY	FULL X-RAY
HEAD SEAMS	SEAMLESS	SEAMLESS
HEAD/SHELL SEAMS	FULL / SPOT X-RAY	FULL X-RAY
OTHER SHELL CIRCUM. SEAMS	FULL / SPOT X-RAY	FULL / SPOT X-RAY

NOTE: ALL DIMENSIONS ARE IN MILLIMETERS UNLESS NOTED OTHERWISE

REV.	DATE	DESCRIPTION
0	9/23	ADDED TEST RING ASSY REF.
5	9/10	ADDED SURFACE AREA TO NAMEPLATE
4	7/19	REVISED VESSEL TITLE PER CUST.
3	7/3	CHANGED SUPPORT ELEVATION
2	6/7	ADDED LIFTING & TAILING DEVICES
1	5/16	GENERAL REVISION PER CUSTOMER

CHIYODA CORPORATION

JOB NO. 51046	SAY IBN RUSHD AROMATICS
PO NO. SAYPOH0004	
REQ NO. MR-50-E-001 Rev. 1.0	
IDENT NO. 51-E-01-DW-0001	6

A-FABRICATION MAY PROCEED — SAY TEAM
B-FABRICATION MAY PROCEED SUBJECT TO COMMENTS NOTED
C-FABRICATION MAY NOT PROCEED — DATE

CHIYODA'S PERMISSION TO PROCEED OR REVIEW TAKEN ON VENDOR PRINTS SHALL NOT RELIEVE VENDOR FROM ITS RESPONSIBILITIES OR LIABILITIES UNDER PURCHASE ORDER

NOOTER — LAYED: PLOTTED 7/24/96 — 965840-ASSY.PRT — 4 REQ'D.

NOOTER CORPORATION
P.O. BOX 1427
ST. LOUIS, MISSOURI 63166

4 MAIN ASSEMBLY
- FOR -
CYCLAR COMBINED FEED EXCHANGER
ITEM #S: 51-E-01 A/D
CHIYODA INTERNATIONAL CORP.
HOUSTON, TEXAS

DATE	DRAWN		JOB NO. 965840
9/25/96	J. Holtz		
CHECKED Hocker	APPD. Ohlendorf	APPD. W.A.S.	DRG. NO. JN-D72765
	APPD. Miller	APPD. Meierotto	SHEET 1 of 10

FINAL

AS BUILT

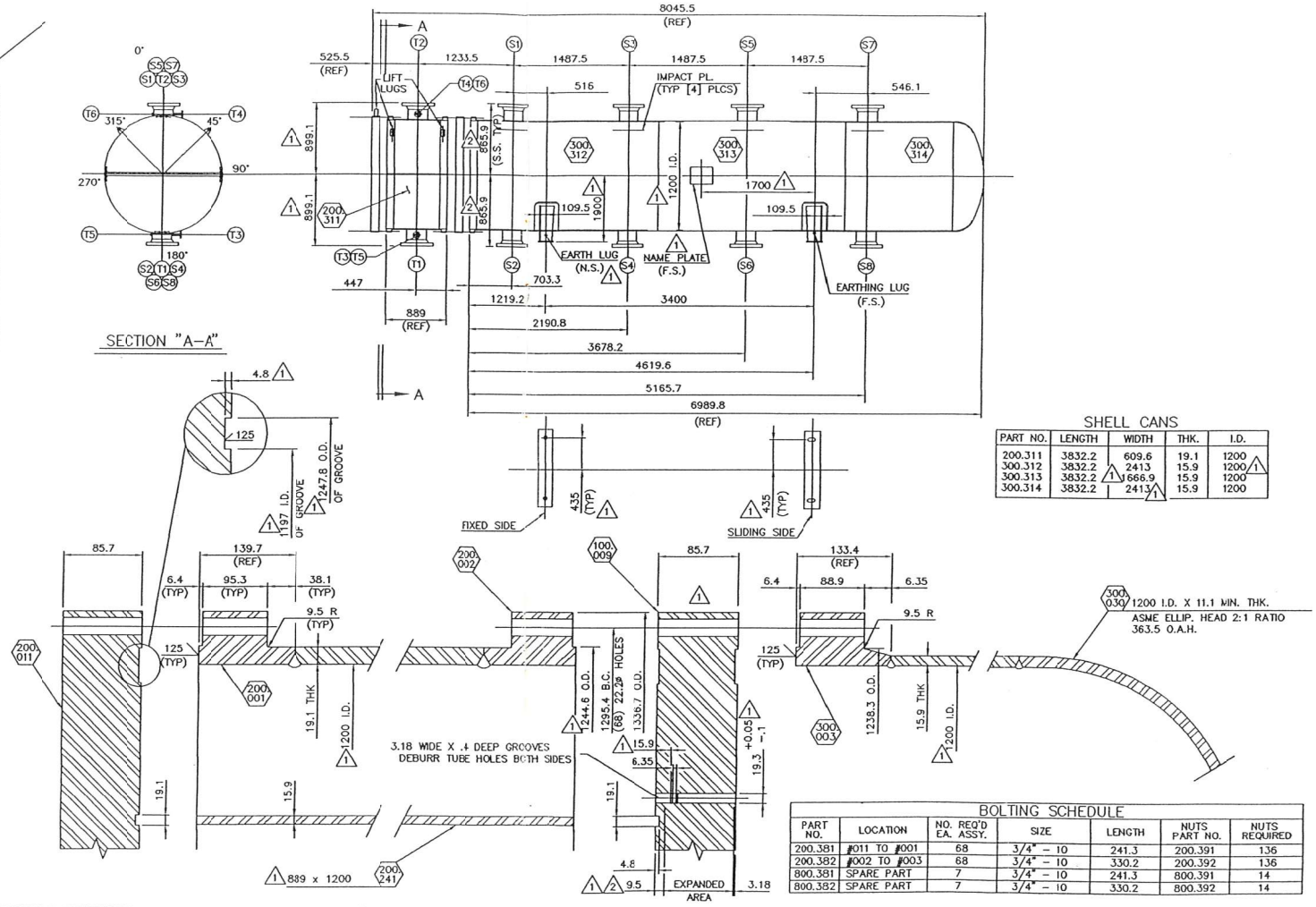

SHELL CANS

PART NO.	LENGTH	WIDTH	THK.	I.D.
200.311	3832.2	609.6	19.1	1200
300.312	3832.2	2413	15.9	1200
300.313	3832.2	666.9	15.9	1200
300.314	3832.2	2413	15.9	1200

BOLTING SCHEDULE

PART NO.	LOCATION	NO. REQ'D EA. ASSY.	SIZE	LENGTH	NUTS PART NO.	NUTS REQUIRED
200.381	#011 TO #001	68	3/4" – 10	241.3	200.391	136
200.382	#002 TO #003	68	3/4" – 10	330.2	200.392	136
800.381	SPARE PART	7	3/4" – 10	241.3	800.391	14
800.382	SPARE PART	7	3/4" – 10	330.2	800.392	14

PLOT SCALE: XX = 12

F:\16318\XH-24688

REV.	DESCRIPTION	DRAWN	CHK'D.	APPRV'D.
2	REV. NOZZLE PROJECTIONS & DIM.	DS 12-10-96	CS 11-12-96	KS 11-12-96
1	REV. PER CUST.	DS 10-25-96	CS 8-8-96	KS 8-8-96
0	ISSUED FOR APPROVAL	JP 7-31-96		

TITLE: OUTLINE DIMENSIONS
SIZE/TYPE: 1193.8 – 6096/AEU
SERVICE: PRODUCT CONDENSER
JOB NO.: 16318
SHOP ORDER: XH-24688/89/90/91
SCALE: NONE

CUSTOMER: CHIYODA CORPORATION
CUST. P.O. NO.: SAYPOH0029
ITEM NO.: 51-E-02A/51-E-02B/51-E-02C/51-E-02D

ENGINEERS AND FABRICATORS, CO.
HOUSTON, TEXAS
EFCO

DRAWING NUMBER XH-24688-2
REV. 2

CHIYODA
JOB NO. 51046
PO NO. SAYPOH0029
REQ NO. MR-50-E-011
IDENT NO. 51-E-02A/B/C/D-CW-C
A- NO COMMENTS PROCEED WITH FABRICATION
B- PROCEED WITH FABRICATION COMMENTS TO BE COMPLETED
C- DO NOT PROCEED WITH FABRICATION
DATE
PURCHASER'S PERMISSION TO PROC
TAKEN ON VENDOR PRINTS SHALL
VENDOR FROM ITS RESPONSIBILITIES
UNDER PURCHASE ORDER

030013

FINAL

AS BUILT

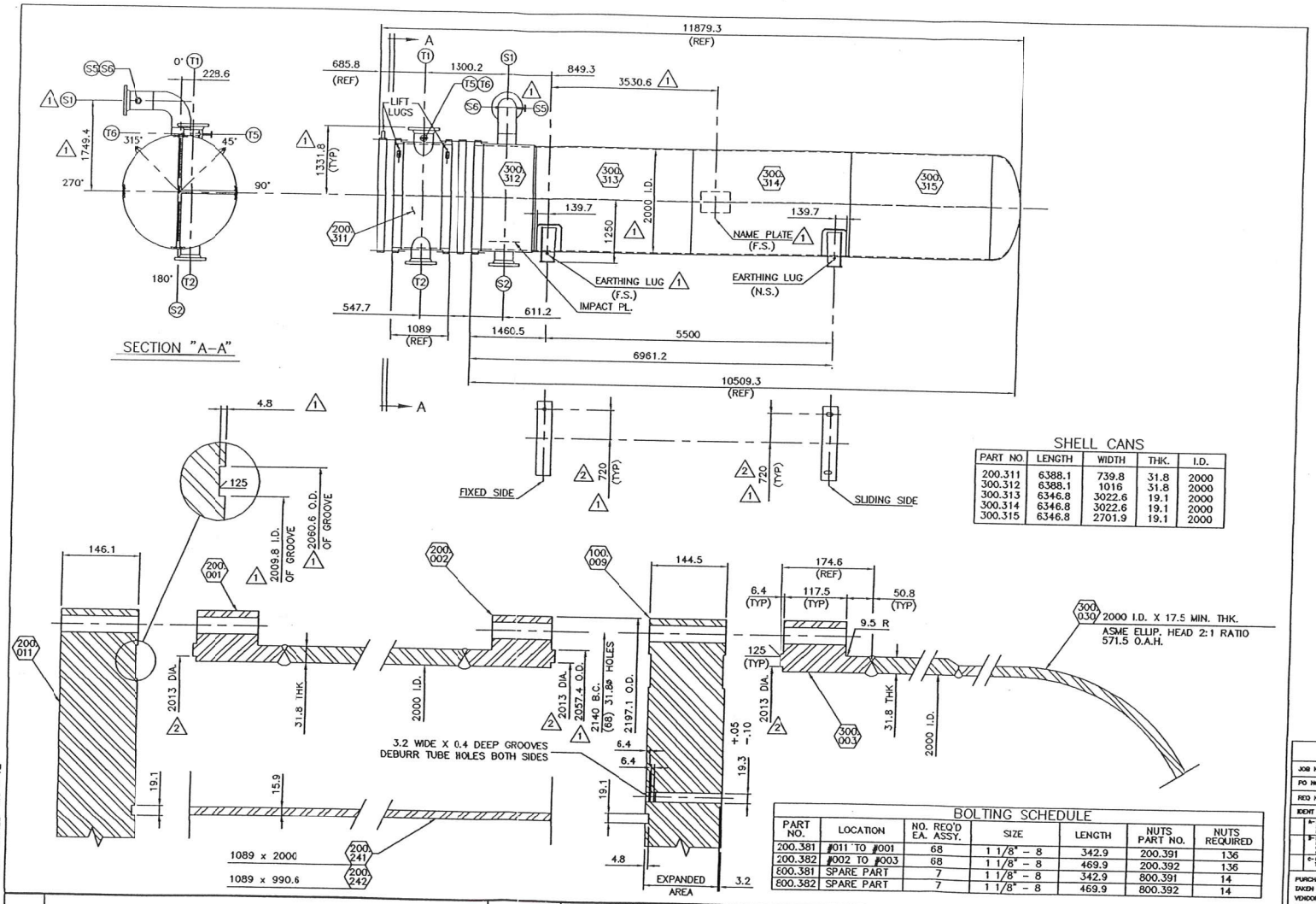

SHELL CANS

PART NO.	LENGTH	WIDTH	THK.	I.D.
200.311	6388.1	739.8	31.8	2000
300.312	6388.1	1016	31.8	2000
300.313	6346.8	3022.6	19.1	2000
300.314	6346.8	3022.6	19.1	2000
300.315	6346.8	2701.9	19.1	2000

BOLTING SCHEDULE

PART NO.	LOCATION	NO. REQ'D EA. ASSY.	SIZE	LENGTH	NUTS PART NO.	NUTS REQUIRED
200.381	#011 TO #001	68	1 1/8" - 8	342.9	200.391	136
200.382	#002 TO #003	68	1 1/8" - 8	469.9	200.392	136
800.381	SPARE PART	7	1 1/8" - 8	342.9	800.391	14
800.382	SPARE PART	7	1 1/8" - 8	469.9	800.392	14

PLOT SCALE: XX = 12

F:\16318\XH-24696

REV.	DESCRIPTION	DRAWN	CHK'D.	APPRV'D.
2	ADD DIM'S., REV. SUPP'T. HOLE LOCATION	DC 12-10-96	12-10	12-10
1	REV. PER CUST.	DS 11-1-96	CS 11-12-96	KS 11-12-96
0	ISSUED FOR APPROVAL	JP 7-16-96	CS 8-8-96	KS 8-8-96

TITLE: OUTLINE DIMENSIONS
SIZE/TYPE: 2006.6 - 9144/AFU
SERVICE: CYCLAR STRIPPER FEED-BOTTOMS EXCHANGER 1
JOB NO.: 16318
SHOP ORDER: XH-24696/97/98/99
SCALE: NONE

CUSTOMER: CHIYODA CORPORATION
CUST. P.O. NO.: SAYPOH0029
ITEM NO.: 51-E-07A/51-E-07B/51-E-07C/51-E-07D

ENGINEERS AND FABRICATORS, Co.
HOUSTON, TEXAS
EFCO

DRAWING NUMBER XH-24696-2
REV. 2

CONTRACTOR
JOB NO. 51046
PO NO. SAYPOH0029
REQ NO. MR-50-E-011
IDENT NO. 51E07ABCD-DW 0003

A- NO COMMENTS PROCEED WITH FABRICATION		SAY TEAM
B- PROCEED WITH FABRICATION COMMENTS TO BE CONSIDERED		
C- DO NOT PROCEED WITH FABRICATION		DATE

PURCHASER'S PERMISSION TO PROCE
TAKEN ON VENDOR PRINTS SHALL NO
VENDOR FROM ITS RESPONSIBILITIES
UNDER PURCHASE ORDER

0300