THIS DOCUMENT CONTAINS CTCI CORPORATION CONFIDENTIAL INFORMATION OF A PROPRIETARY NATURE. THIS INFORMATION MUST NOT BE COPIED OR DISCLOSED IN WHOLE OR IN PART TO OUTSIDE PARTIES NOR USED FOR OTHER THAN THE PURPOSE FOR WHICH PROVIDED WITHOUT PERMISSION OF MANAGEMENT.
本文件所述及資料及文件皆為中鼎工程股份有限公司（中鼎）版權所有，未徵得中鼎同意不得將其中全部或部份翻印或轉載與第三者。

sabic

ARABIAN INDUSTRIAL FIBERS COMPANY

IR-II AROMATICS PROJECT

PROJECT NO. 10E0541A01

DOCUMENT TITLE:

REFORMATE FEED TANK DATA SHEET

DOCUMENT NO:

DS-56-FA-501

REV	DESCRIPTION	BY	CHK.	APPR.	DATE
2	Revised as Marked	LSH	SYL	YSL	9-Aug-11
1	Issued for Design	LSH	SYL	YSL	22-Apr-11
0	Issue For Approval	LSH	SYL	YSL	23-Mar-11

ابن رشد ibn rushd

ARABIAN INDUSTRIAL FIBERS COMPANY YANBU, KINGDOM OF SAUDI ARABIA

CTCI CORPORATION

CERTIFIED

PROJ.

MGR DATE

CLIENT DATE

PAGE 1 OF 2

XC32C-56-501

GN-502 84.10

THIS DOCUMENT CONTAINS CTCI CORPORATION CONFIDENTIAL INFORMATION OF A PROPRIETARY NATURE. THIS INFORMATION MUST NOT BE COPIED OR DISCLOSED IN WHOLE OR IN PART TO OUTSIDE PARTIES NOR USED FOR OTHER THAN THE PURPOSE FOR WHICH PROVIDED WITHOUT PERMISSION OF MANAGEMENT.
本文件所述及資料及文件皆為中鼎工程股份有限公司（中鼎）版權所有，未徵得中鼎同意不得將其中全部或部份翻印或轉接與第三者。

CONTENTS

ITEM	EQUIPMENT NO.	SHEET NO.	REV. NO.	REV. DATE
1.	56-F-01	1 THRU 3 OF 3	2	09-Aug-2011

Attachment total 7 pages.

ابن رشد ibn rushd	STORAGE TANK DATASHEET	Contract: 10E0541A01	سابك sabic
		Equip. No.: 56-F-01	
		Revision : 2 Date: 09-Aug-2011	
		Unit : 56 - Sulfolane	
		P.O. No.:	
		Document No. : DS-56-FA-501	
		Sheet 1 of 3	CTCI CORPORATION

Client:	Arabian Industrial Fibers Company	Plant:	Sulfolane
Service:	Reformate Feed Tank	Site:	Yanbu, Kingdom of Saudi Arabia

REV: 2

DESIGN SKETCH

VESSEL DIMENSIONS: ID: 34200 T/T: 18000 QTY: 1

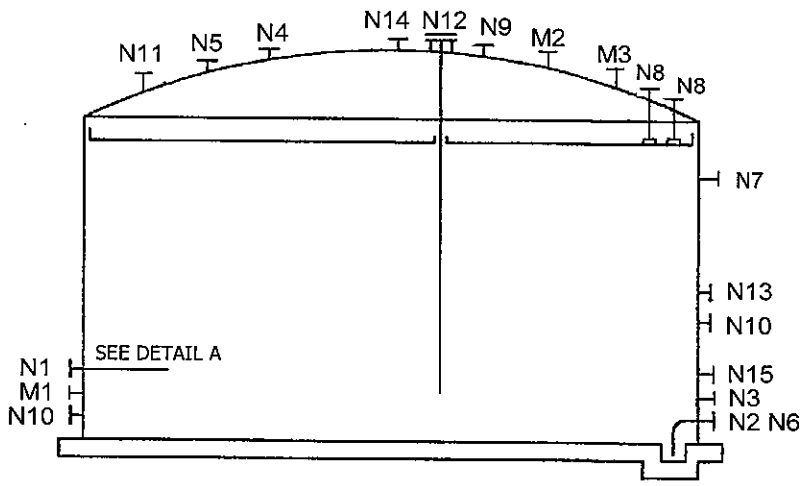

DESIGN CONDITIONS		
Pressure:	254.0	mmH2O(g)
At:	85	°C
Vacuum:	100.0	mmH2O(g)
At:		°C
Min. Design Metal Temp:	Existing (Note 10)	°C
At:		bar(g)
Liquid Level:		mm
Specific Gravity of Liquid:	0.762	
At:	15	°C

CONSTRUCTION			
	MATERIALS	CORROSION ALLOWANCE	
Roof:	C.S.	NONE	mm
Shell:	C.S.	1.5	mm
Internal:			mm

OPERATING CONDITIONS		
Fluid:	Aromatic Hydrocarbon	
Pressure + :	12.7	mmH2O(g)
At:	50	°C
Vacuum - :		mmH2O(g)
At:		°C
Low Temperature:		°C
At:		mmH2O(g)
Hydrogen Partial Pressure:		mmH2O(g)
At:		°C

INSULATION	
Type:	
Req'd Thickness:	
Fireproofing:	

NOTES & SPECIAL CONDITIONS	
Roof Type:	Internal Floating Roof
Stress Relieve (Process Reason Only):	-
Earthquake Design:	-
Roof Tie Rods:	-
Seismic Zone:	-
Essential Facilities Factor:	-
Site Amplification Factor:	-
Zone Coefficient:	-
Roof Tie Rods:	-

55189

ابن رشد ibn rushd	STORAGE TANK DATASHEET	Contract: 10E0541A01 Equip. No.: 56-F-01 Revision : 2 Date: 09-Aug-2011 Unit : 56 - Sulfolane P.O. No.: Document No. : DS-56-FA-501 Sheet 2 of 3	سابك sabic CTCI CORPORATION	REV

NOZZLE SCHEDULE

TAG	QTY	SIZE in	PRESSURE RATING	DESCRIPTION
M1	2	24	150#RF	Shell Manhole
M2	1	24	150#RF	Roof Manhole
M3	1	36	150#RF	Roof Manhole
N1	1	10	150#RF	Filling Nozzle
N2	1	4	150#RF	Spare Nozzle
N3	1	1	150#RF	Temperature Indicator Nozzle
N4	1	1	150#RF	Gas Blanketing Nozzle
N5	1	4	150#RF	Gas Blanketing Nozzle
N6	1	4	150#RF	Drain Nozzle W/ Sump
N7	9	2 1/2	150#RF	Foam Nozzle
N8	2	1 1/2	150#RF	Level Indicator
N9	1	8	150#RF	Pressure / Vacuum Vent (Note 6)
N10	1	4	150#RF	Filling Nozzle
N11	1	20	150#RF	Emergency Vent
N12	1	8	150#RF	Gauge Hatch W/6" Slot Dipping Device
N13	1	4	150#RF	Spare Nozzle
N14	1	2	150#RF	Gas Transfer Nozzle
N15	1	10	150#RF	Suction Nozzle

NOTES:

1. Formerly Aromatics Storage Tank, 58-F-02.
2. Locating filling and suction nozzles 180° apart to allow sufficient residence time for water settling and thermal equilibrium.
3. Flash point = -17°C.
4. Nominal Capacity = 16500 m³, Working Capacity = 14238 m³. 1
5. Pump In Rate = 308.9 (m3/h) & Pump Out Rate = 255 (m3/h). 2
6. CTCI shall confirm PSV nozzle size.
7. Vapor Pressure : 0.496 bar(a) @ 38°C
8. Support shall be confirmed by manufacturer.
9. Liquid level: HHLL: 16500 mm HLL: 14400 mm, LLL: 3600mm, LLLL: 1000mm. 2
10. The Min. Design Ambient Temperature should be 6 °C.
11. Dimensions are in millimeter unless otherwise noted.
12. Add 10" new nozzle N15 for pump suction.
13. Limit the inlet velocity to 3 ft/s(1 m/s) until inlet pipe is submerged. Add new distributor at N1 nozzle as detail A. 1
14. Add new one (1) N8 nozzle. 1
15. Existing design pressure : 254 mmH2O(g)@85℃, New design condition : same as existing. 1

55189

ابن رشد ibn rushd	STORAGE TANK DATASHEET	Contract: 10E0541A01	سابك sabic
		Equip. No.: 56-F-01	
		Revision : 2 Date: 09-Aug-2011	
		Unit : 56 - Sulfolane	
		P.O. No.:	
		Document No. : DS-56-FA-501	
		Sheet 3 of 3	CTCI CORPORATION REV

DETAIL A

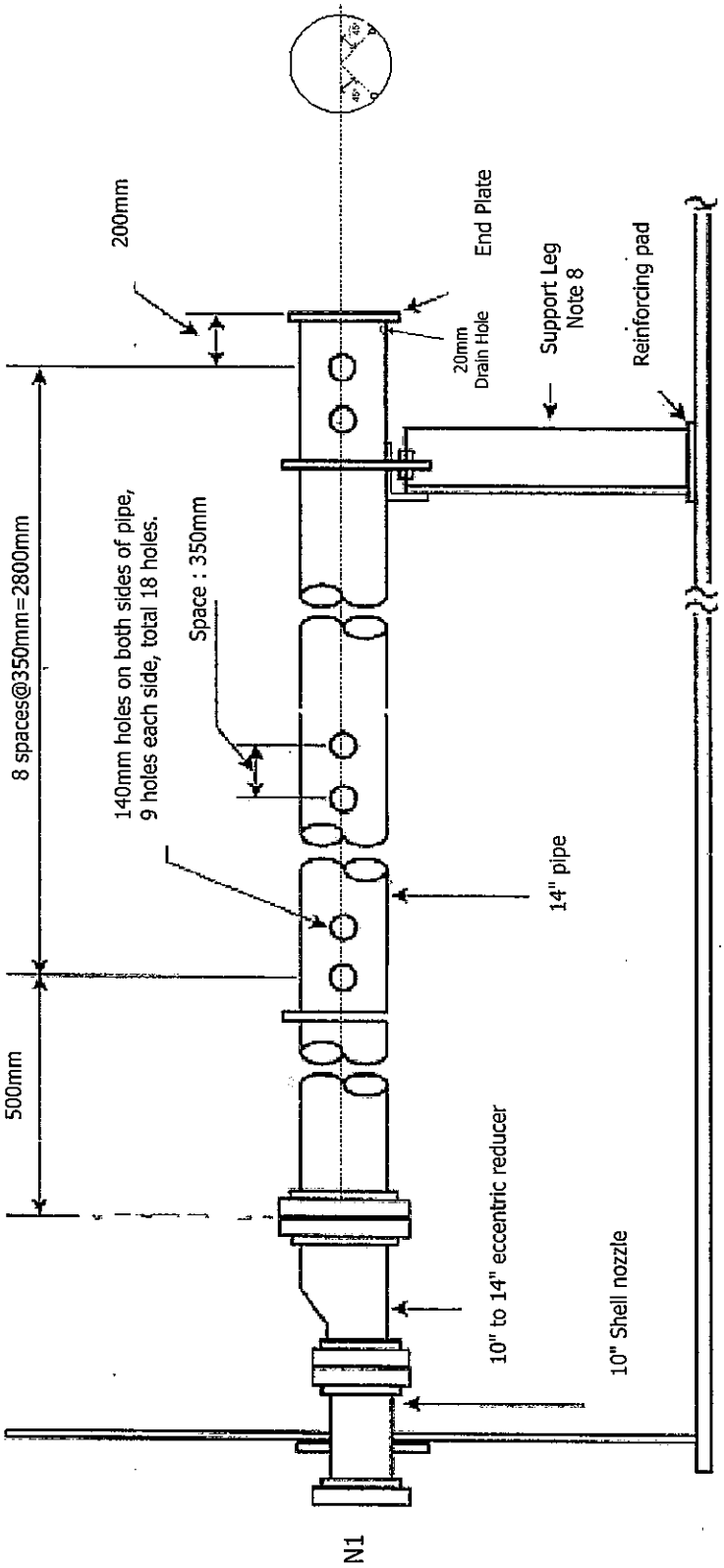

CHIYODA CORPORATION

CTCI CORPORATION

(/)

FILE NO. :

SPECIFICATION

FOR

58-F-01 A, B
58-F-02

FOR CONSTRUCTION

MARK	DESCRIPTION	BY	CHKD	APVD	DATE
◇					
◇					
◇					
◇	As per ACL-185	K. Hayada			1 Aug. '91

REVISIONS

CLIENT :	ARABIAN INDUSTRIAL FIBERS COMPANY (IBN RUSHD)	APVD	
PROJECT TITLE:	IBN RUSHD PTA & AROMATICS PROJECT - AROMATICS	CHKD	
JOB NO. :	51046	MADE	K. Hayada
DOC NO. :	SP-58-F-001 (/)	DATE	22 Apr. '96

ALL RIGHTS RESERVED
THIS DOCUMENT AND ANY DATA AND INFORMATION CONTAINED THEREIN ARE CONFIDENTIAL AND THE PROPERTY OF CHIYODA CORPORATION (CHIYODA) AND THE COPYRIGHT THEREIN IS VESTED IN CHIYODA. NO PART OF THIS DOCUMENT, DATA, OR INFORMATION SHALL BE DISCLOSED TO OTHERS OR REPRODUCED IN ANY MANNER OR USED FOR ANY PURPOSE WHATSOEVER, EXCEPT WITH THE PRIOR WRITTEN PERMISSION OF CHIYODA

CTCI CORPORATION

UOP

25 East Algonquin Road - PO Box 5017 - Des Plaines, Illinois 60017-5017 - USA

PROJECT SPECIFICATION

560696 - 306 - 1 SHEET 1

REV	DATE	BY	APP'D	REV	DATE	BY	APP'D
0	4/10/95	SAW					
1	5/15/95	SAW	NK				

ATMOSPHERIC STORAGE TANKS

Benzene/Toluene Fractionation Unit

Item Number	Service	Sheet
	References	2
	General Notes	2
	Specific Notes	3
~~F-5801A,B~~ 58-F-01 A,B	Benzene Day Tank	4
~~F-5802~~ 58-F-02	Aromatics Storage Tank	5

This equipment shall be designed and constructed in accordance with the following UOP Standard Specifications: 3-16-3, 7-11-0, 9-11-1, 9-16-1

NOTE - These data are confidential and the property of UOP and shall not be disclosed to others or reproduced in any manner or used for any purpose whatsoever except by written permission or as provided in a signed agreement with UOP relating to such data.

Rev. 1
3/86

REV	DATE	BY	APP'D	REV	DATE	BY	APP'D
0	4/10/95						
1	5/15/95	SMW	NK				

ATMOSPHERIC STORAGE TANKS

I. References

A. UOP Standard Specification 3-16 Storage Tanks Atmospheric
B. UOP Standard Specification 7-11 Electrical (For Tank Grounding)
C. UOP Standard Specification 9-11 External Thermal Insulation
D. UOP Standard Specification 9-16 Painting
E. UOP Standard Specification 9-21 Fire Protection
F. API 650 Welded Steel Tanks for Oil Storage

II. General Notes

A. Tanks shall be designed, fabricated and tested in accordance with the above references, except as modified in this specification.

B. ~~Alternate tank sizing may be offered if a cost saving to the owner can be demonstrated. Nominal tank capacity must be maintained. Any alternate must be approved by the owner.~~ Deleted

C. ~~Alternate dome or umbrella roof may be offered in place of cone roof, where feasible, and where a cost saving to the owner can be demonstrated. Nominal tank capacity must be maintained. Any alternate must be approved by the owner.~~ Deleted

D. All tanks shall be grounded.

E. See Project Specification 614 included under same project number as this specification for level gauges that will be used and furnished by others.

F. Where gas blanketing is used see Project Specification 617 included under same project number as this specification for gas blanketing control valves that will be used and furnished by others.

G. Where propeller type tank mixers are required see Project Specification 316 included under same project number as this specification for the mixer that will be provided and furnished by others.

H. Where tank heaters are required see Project Specification 318 included under same project number as this specification for the type of heater that will be used and furnished by others.

I. All connections shall be flanged.

J. Working capacity must be maintained.

K. Fixed roof tank and internal floating roof tanks shall be provided with a subsurface or semi-fixed foam injection system, type II discharge outlet, suitable foam maker, and connecting piping. Piping terminates outside the tank dike walls. (For the Type II, refer to the attached Figure A-1-4 (P) of NFPA 11.)

NOTE - These data are confidential and the property of UOP and shall not be disclosed to others or reproduced in any manner or used for any purpose whatsoever except by written permission or as provided in a signed agreement with UOP relating to such data.

III. Specific Notes (See Specific Tank Sheets for Notes that Apply)

1. Filling and suction nozzles to be located 180 degrees apart to allow sufficient residence time for water settling and thermal equilibrium.

2. Provide one 4 inch gas tight gauging and sampling device including all necessary accessories, to permit gauging and sampling without venting gas to atmosphere.

3. Tank shall be designed with a frangible joint (per API-650) and an emergency manhole (with) cover.

4. The tank shell thickness shall be calculated in accordance with the applicable requirements of API 650 using the minimum corrosion allowance as 1/16 inch (1.5 mm) for all rings. The minimum corrosion allowance used shall be 1/16 inch (1.5 mm) for the tank bottoms.

5. Inlet velocity shall be limited to three feet per second (one meter per second) until inlet pipe is submerged. Inlet distributors may have to be added to limit the inlet velocity.

6. The filling rate and the pumpout rate are based on maximum rates. The contractor shall design the venting system based on 1.5 times the filling/pumpout rates shown. The contractor shall adjust the pumpout rate to account for the flow rate that occurs when the tank is drained.

7. The tanks shall be furnished with an internal floating roof as per API Standard 650 "Welded Steel Tanks for Oil Storage" Appendix H. Each internal floating roof shall be equipped with a liquid mounted primary seal, a wiper type secondary seal made of a resilient material and gasketed fittings. The tank will be gas blanketed and equipped with pressure/vacuum vents on all openings in outer shell of roof.

NOTE - These data are confidential and the property of UOP and shall not be disclosed to others or reproduced in any manner or used for any purpose whatsoever except by written permission or as provided in a signed agreement with UOP relating to such data.

CTCI CORPORATION

uop

25 East Algonquin Road • PO Box 5017 • Des Plaines, Illinois 60017-5017 • USA

ATMOSPHERIC STORAGE TANKS

PROJECT SPECIFICATION

560696 — 306 — 4 SHEET 4

REV	DATE	BY	APVD	REV	DATE	BY	APVD
0	4/10/95			4	1/5/96	ASA	ASA
1	4/12/95	NK	NK				
2	5/15/95	SMW	NK				
3	7/2/95	SMW	NK				

Tank Name		Benzene Day Tank
Item Number		58-F01A, B ~~F-5801A,B~~
Number of Tanks		2
Tank Size	Nominal Capacity, m^3	1830
	Diameter, m ID	13.4
	Height, m	13.0
Working Capacity, m^3		1418
Material of Construction		Carbon Steel
Design Pressure, mmH2O(g)		254
Design Vacuum, mmH2O(g)		100
Design Temperature, °C		85
Roof Type: C = Cone F = Floating IF = Internal Floating		① C ② IF
Tank Contents	Material Stored	Benzene
	Density kg/m^3 @ 15°C	859
Flash Point (above or below 38°C)		Below
Storage Temperature, °C		40 max
Filling Nozzle		1 @ 6"
Suction Nozzle		1 @ 16"
Temperature Indicator Nozzle		1 @ 1" ④
Recirculation Nozzle		1 @ 6"
Gas Blanketing Nozzle (Roof)		1 @ 1"
Gas Blanketing Nozzle (Roof)		④ 1 @ 2"
Drain Valve Nozzle		1 @ 4"
Foam Chambers		Provide
Level Indicator Nozzle		1 @ 1-1/2"
Pressure/Vacuum Vent Nozzle		Provide
Filling Rate, m^3/h		50.9
Pumpout Rate, m^3/h		609.5
Notes - See Sheet 3		1,2,3,4,5,6,7

NOTE: e data are confidential and the property of UOP and shall . disclosed to others or reproduced in any manner or used for any purpose whatsoever except by written permission or as provided in a signed agreement with UOP relating to such data.

509310

CTCI CORPORATION

uop

25 East Algonquin Road • PO Box 5017 • Des Plaines, Illinois 60017-5017 • USA

ATMOSPHERIC STORAGE TANKS

PROJECT SPECIFICATION

560696 — 306 — 4 SHEET 5

REV	DATE	BY	APVD	REV	DATE	BY	APVD
0	4/10/95			4	1/5/96	ASA	ASA
1	4/12/95	NK	NK				
2	5/15/95	SMW	NK				
3	7/2/95	SMW	NK				

Tank Name		Aromatics Storage Tank
Item Number		58-T-02 ~~T-5802~~
Number of Tanks		1
Tank Size	Nominal Capacity, m^3	16500
	Diameter, m ID	34.2
	Height, m	18.0
Working Capacity, m^3		13800
Material of Construction		Carbon Steel
Design Pressure, mmH2O(g)		254
Design Vacuum, mmH2O(g)		100
Design Temperature, °C		85
Roof Type: C = Cone F = Floating IF = Internal Floating		① Dome or IF
Tank Contents	Material Stored	Aromatics
	Density kg/m^3 @ 15°C	854
Flash Point (above or below 38°C)		Below
Storage Temperature, °C		40 max
Filling Nozzle		④ 1 @ 10"
Filling Nozzle (from desorbent surge drum at MX Sorbex Unit)		④ 1 @ 4"
Suction Nozzle		1 @ 4"
Temperature Indicator Nozzle		1 @ 1" ①
Gas Blanketing Nozzle (Roof)		1 @ 1"
Gas Blanketing Nozzle (Roof)		1 @ 4"
Drain Valve Nozzle		1 @ 4"
Level Indicator Nozzle		1 @ 1-1/2"
Foam Chambers		Provide
Pressure/Vacuum Vent Nozzle		Provide
Filling Rate, m^3/h		④ 262
Pumpout Rate, m^3/h		14.4
Notes - See Sheet 3		1,2,3,4,5,6,7

NOTE - se data are confidential and the property of UOP and shall : e disclosed to others or reproduced in any manner or used . ay purpose whatsoever except by written permission or as provided in a signed agreement with UOP relating to such data.

CHIYODA CORPORATION

CTCI CORPORATION

◇ New sheet added

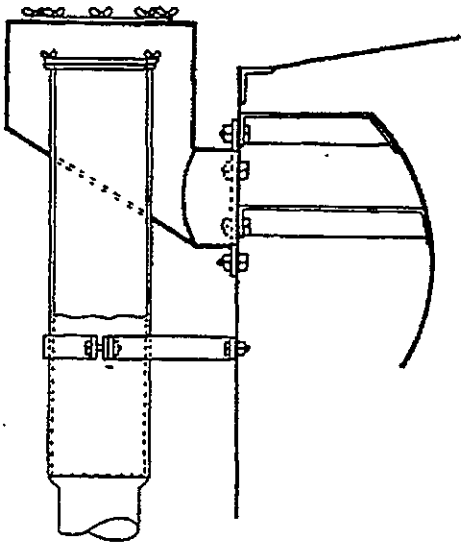

Figure A-1-4(p) Air foam chamber with Type II outlet.

NFPA

07100 ※

509312

TECHNICAL & CONSTRUCTION INFORMATION

DESIGN CODE	ASME SEC VIII, DIV 2, 95 ED & 95 ADD
CUSTOMER SPEC.	22854-SP-000-D-003
SPECIFIC GRAVITY	0.52
SERVICE	PROPANE
MAX DESIGN METAL TEMP.	85°C
MIN DESIGN METAL TEMP.	-46°C
DESIGN PRESSURE	20 barg AT 85°C
TEST PRESSURE	25 barg PER AT-301
ALLOWABLE VACUUM	1.034 barg
DESIGN WIND VELOCITY	125 km/h (ASCE 7-88)
SEISMIC	ZONE 1 (ASCE 7-88)
FOUNDATION	BY OTHERS
CONSTRUCTION	BY ACBI
CORROSION ALLOWANCE	
SHELL	1.0 mm
FITTINGS	1.0 mm
RADIOGRAPHY	FULL (100% JOINT EFF.)
IMPACT TESTING	ALL PRESSURE ENVELOPE MATERIALS
CAPACITY	2145 m^3
TOLERANCES	PER APPENDIX C OF CUSTOMER SPEC.

MATERIAL SPEC	
SHELL PLATES	SA537 - CLASS 2
COLUMN STUBS	SA537 - CLASS 2
LOWER COLUMNS	A36
FORGINGS	SA350 - LF2 (IMPACTS AT -48°C)
INTERNAL PIPE	A333 GR6
BRACING	A36
BASE PLATES	A36
GASKETS	316 STN STL SPIRAL WOUND GRAPHITE FILLED (ASBESTOS FREE)
STUD BOLTS	SA320-L7
NUTS	SA194-GR4
FIELD PWHT	ENTIRE SPHERE
INSULATION	NONE
FIRE PROOFING	COLUMNS ONLY TO FULL HEIGHT

LIST OF SHELL PLATES FOR ONE SPHERE

MARK	NO. REQ'D.	THK'S.
1	1	46.37
2	2	46.37
3	4	46.31
4	9	46.21
4P	9	46.21
5	4	45.06
6	2	44.89
7	1	44.89

LIST OF FITTINGS

CUST. MARK	ACBI MARK	QUANT	SIZE	RATING	DESCRIPTION
J1	9-1	1	4"	300# RF	TOP NOZZLE W/INTERNAL (LIC)
J2	6-1	1	8"	300# RF	TOP NOZZLE W/INTERNAL (LI)
J3	8-1	1	4"	300# RF	TOP NOZZLE W/INTERNAL (LALL)
J4	7-1	1	4"	300# RF	TOP NOZZLE W/INTERNAL (LAHH)
J5	5-1	1	2"	300# RF	TOP NOZZLE W/INTERNAL (TI)
M1	11-A	1	24"	300# RF	TOP MANHOLE W/DAVIT
N1	4-1	1	8"	300# RF	TOP NOZZLE W/INTERNAL (LIQ. IN)
N2	10-A	1	24"/12"	STUB END	BOTTOM NOZZLE W/VORTEX BREAKER
					(LIQ. OUT)
N3	3-1	1	8"	300# RF	TOP NOZZLE (RELIEF)
	14-A	1			NAMEPLATE
	15-1	2			EARTHING LUGS
		1			FIREWATER SPRAY SYSTEM

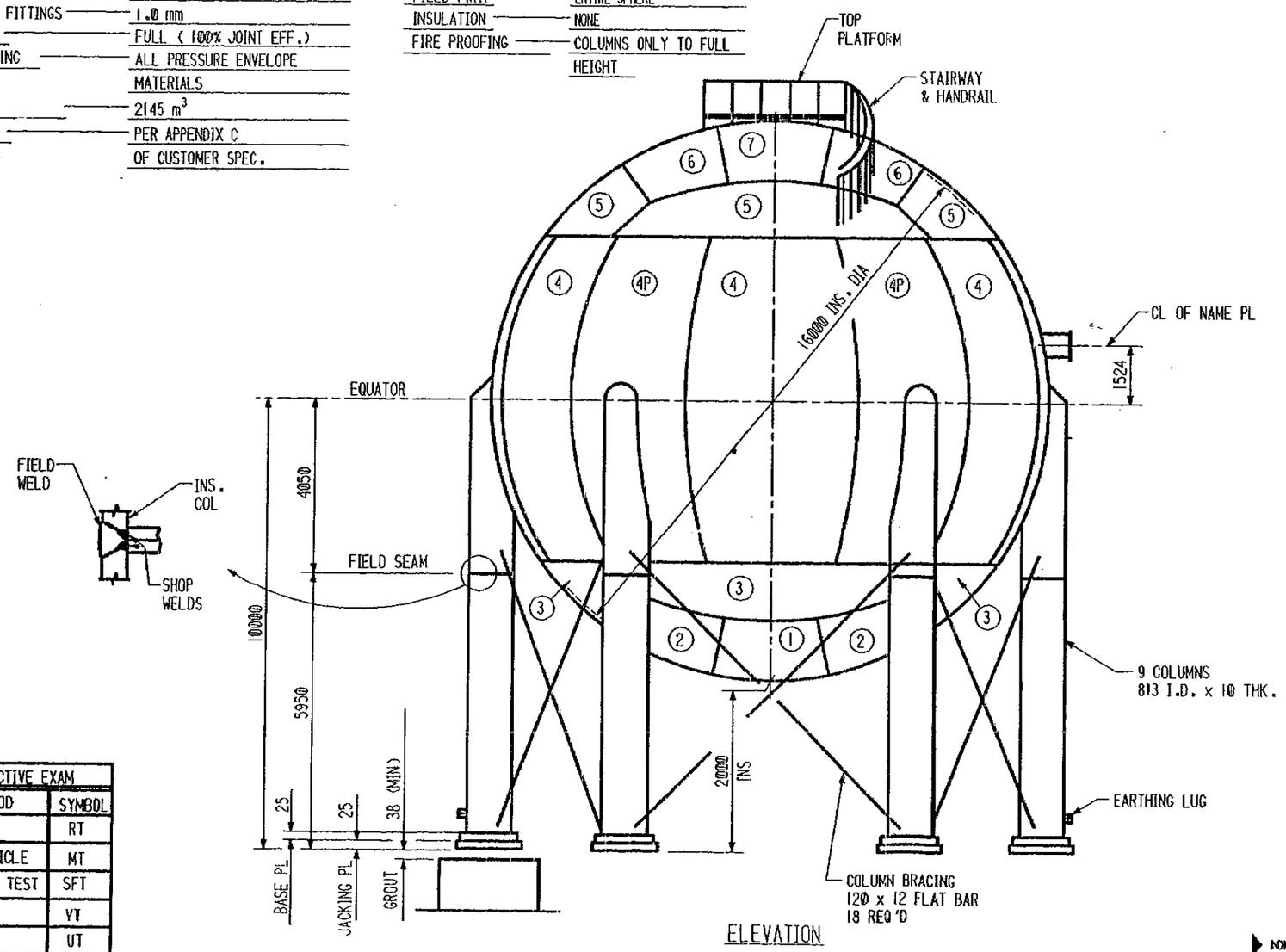

ELEVATION

AS - BUILT

NOTES:

1.) SEE DWG #2 FOR NOZZLE ORIENTATION.
2.) SEE DWG # 35 FOR STAIRWAY KEY PLAN.
3.) SEE DWG # F1 FOR FOUNDATION LOADS AND COLUMN LOCATIONS.

NON-DESTRUCTIVE EXAM	
METHOD	SYMBOL
RADIOGRAPHIC	RT
MAGNETIC PARTICLE	MT
SOLUTION FILM TEST	SFT
VISUAL	VT
ULTRASONIC	UT

REVISIONS	BY	CHKD	DATE	MODIFICATION/REMARKS
2	KT	WJH	4-2-97	REVISE TECH. & CONST. INFO. LIST OF FITTINGS DESCRIPTION
1	KT	WJH	2-18-97	REVISE TECH. & CONST. INFO. ADD NDE TEST, EARTHING LUG

▶ INDICATES CHANGE FROM PREVIOUS ISSUE

ARABIAN CBI LTD.

GENERAL ARRANGEMENT
16.0 M ID PROPANE SPHERE
IBN RUSHD PTA AND AROMATICS PLANT PROJECT
ARABIAN INDUSTRIAL FIBERS CO. LTD
YANBU, SAUDIA ARABIA

ITEM NO 181-D-001
BY DRW CHKD WJH DATE 11/5/96
R L HERBERT
ENGINEERING SUPERVISOR

CONTRACT NO E1)965212
DWG 1 REV 2
SHT

This drawing is the property of ACBI and is to be used only in conjunction with the performance of work by ACBI. Reproduction in whole or in part is expressly forbidden.

12#dgn#652120001.DGN

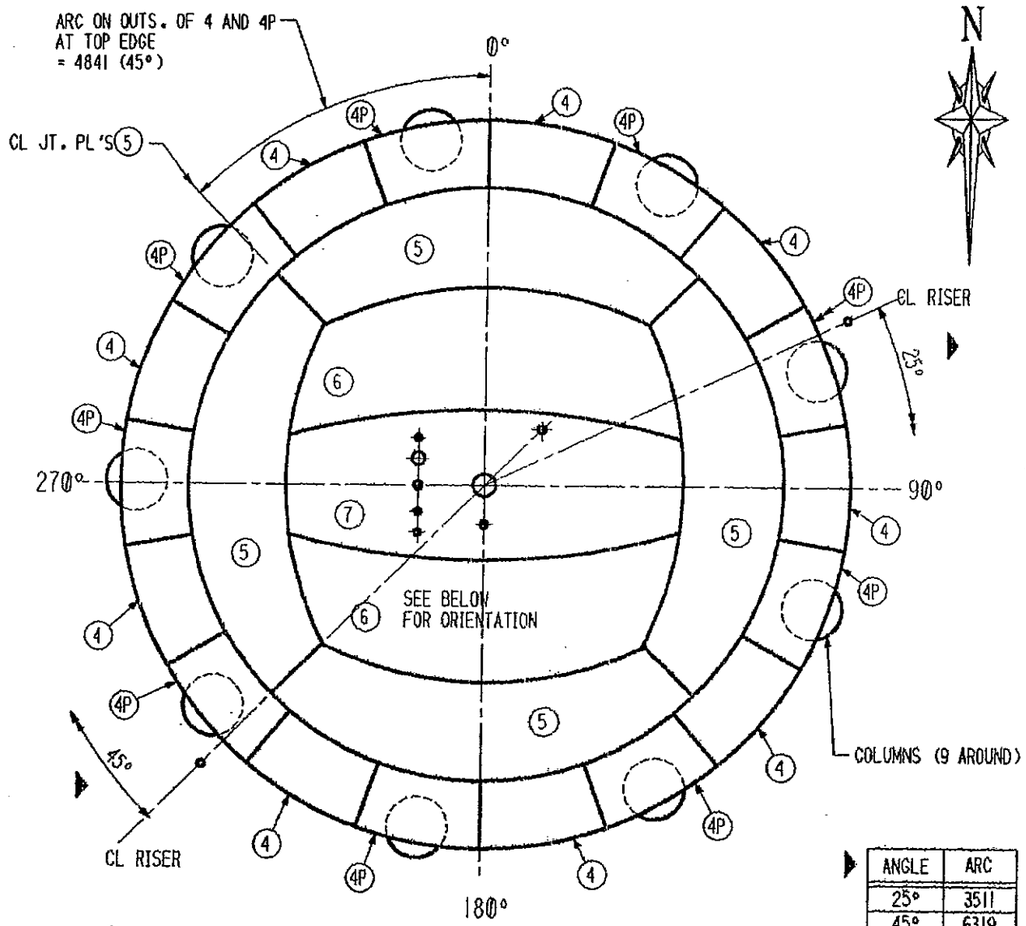

TOP PLAN

ANGLE	ARC
25°	3511
45°	6319

ARCS ARE MEASURED
ON OUTSIDE AT EQUATOR

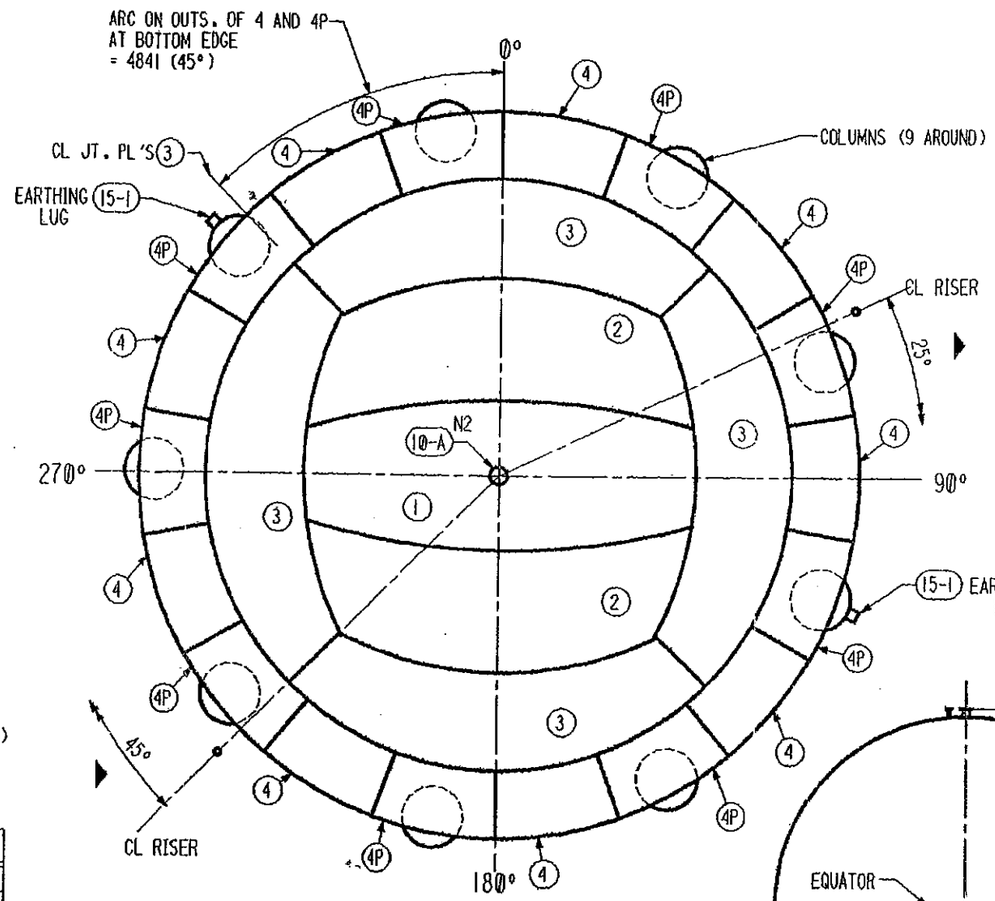

BOTTOM HEAD PLATES
INSIDE VIEW

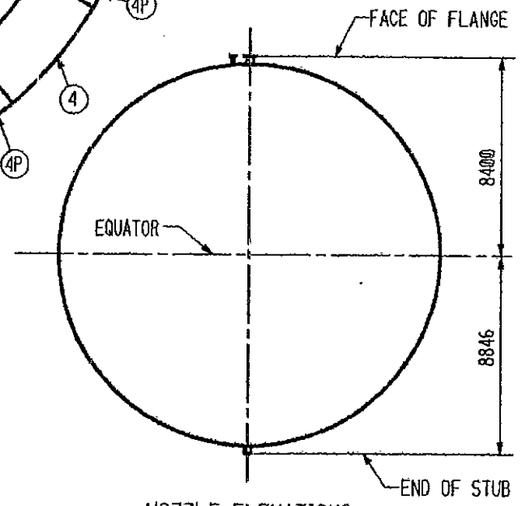

NOZZLE ELEVATIONS

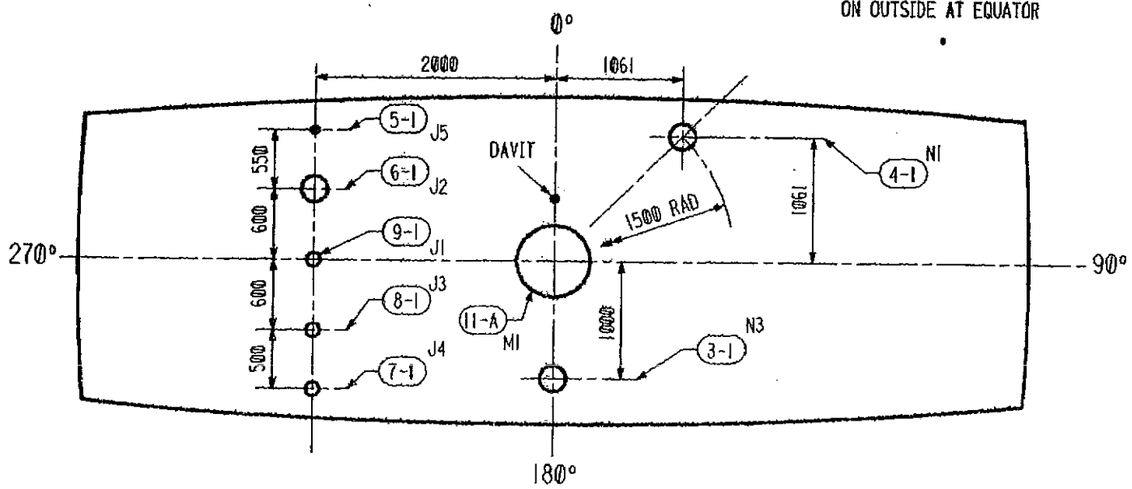

FITTINGS IN TOP HEAD
(OUTSIDE VIEW)

AS - BUILT

▶ INDICATES CHANGE FROM PREVIOUS ISSUE

REV	CHKD	DATE	BY	MODIFICATION/REMARKS
2	WJH	5-12-97	KT	ADD RISER ORIENTATION
1	WJH	2-18-97	KT	ADD DAVIT & EARTHING LUG LOCATION. REVISE PC MARK

REVISIONS

ARABIAN CBI LTD.

ORIENTATION
16.0 M ID PROPANE SPHERE
IBN RUSHD PTA AND AROMATICS PLANT PROJECT
ARABIAN INDUSTRIAL FIBERS CO. LTD
YANBU, SAUDIA ARABIA

ITEM NO 101-D-001
BY DRW CHKD WJH DATE 11/5/96
R.L. HERBERT
ENGINEERING SUPERVISOR

CONTRACT NO 965212
DWG 2 REV 2
SHT

This drawing is the property of ACBI and is to be used only in conjunction with the performance of work by ACBI. Reproduction in whole or in part is expressly forbidden.

08:30:07 Oct. 9, 1996
65212002.DGN

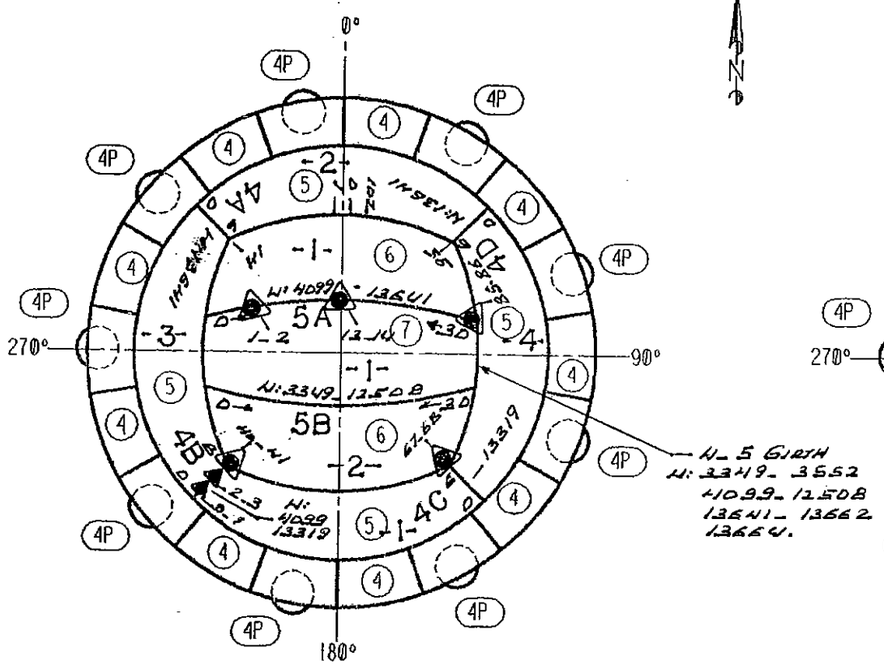

TOP PLAN

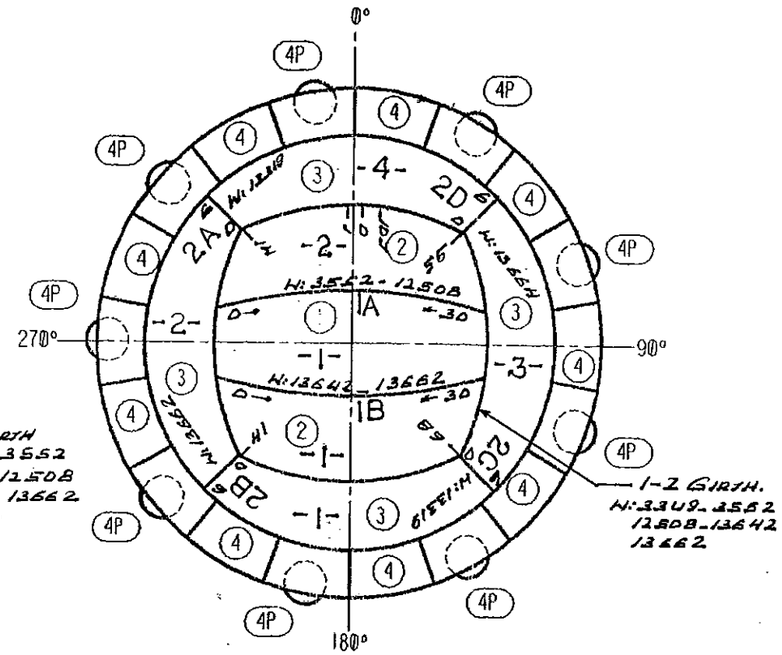

BOTTOM PLAN

(INSIDE VIEW)

NDE PERSONNEL (MT & PT ONLY)		NAME OF WELDER	I.D.
F. E. KHAN	LEVEL II	M. SIDDIQUE	3349
K. M. VARGHESE	LEVEL II	M. S. KARIM	3552
		M. LATIF BIN	4099
		CHUNN MOHD.	4339
		N. V. LEANO	12508
LIST NDE PROCEDURES USED - (MT & PT ONLY)	JOINT I.D. IF REQ'D	A. OCAMPO	13319
		R. B. BRUCAL	13641
MT SYW. REV. B		R. J. ROLAS	13642
MT B - REV. 7		R. T. MANALO	13662
PT SW REV. B		J. R. MARQUEZ	13664
PT B REV. B			
LIST WELD PROCEDURE	JOINT I.D. IF REQ'D		
WPS. B01BC1 REV. 0			

FOR AUTHORIZED INSPECTOR ONLY

ABS 806-03 SERVICES

11-6-97

ROMEO M. LACASANDILE MD#1074

INSTRUCTIONS:

1.) RECORD WELDERS I.D. ON EACH JOINT.
2.) RECORD JOINT I.D. & R.T. INTERVALS (FIRST & LAST FOR 100%) OR LOCATION FOR SPOT.
3.) RECORD MATERIAL I.D. FOR EACH PIECE OR ASSEMBLY.

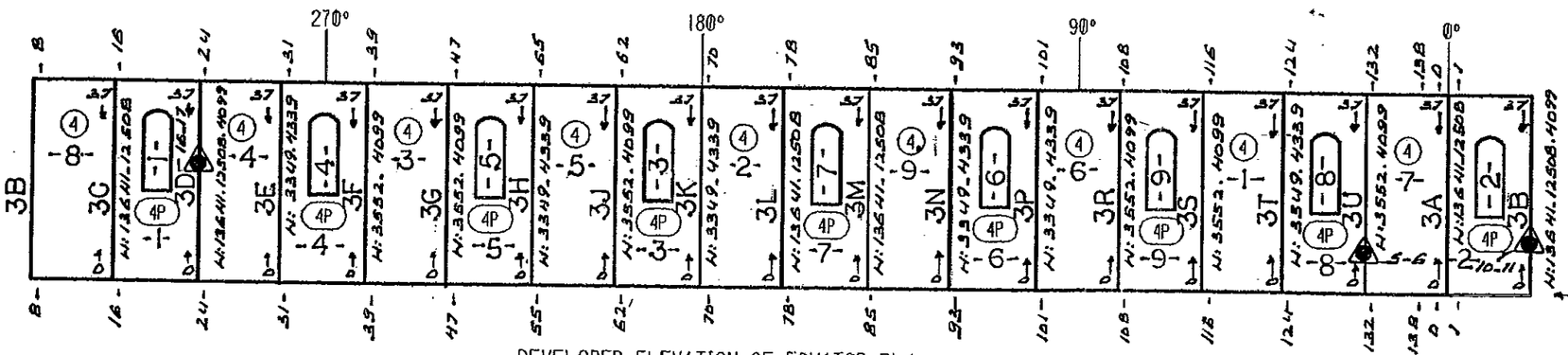

DEVELOPED ELEVATION OF EQUATOR PL's

(OUTSIDE VIEW)

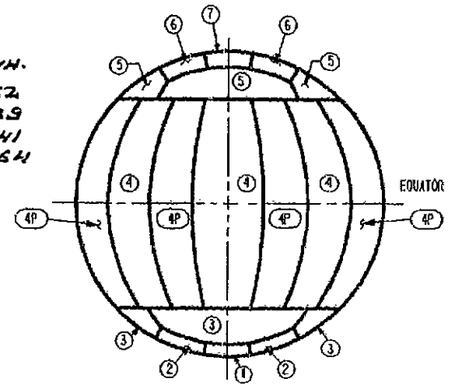

ELEVATION

FOR CONSTRUCTION

VESSEL DIAMETER/mm	
VERTICAL	15960
HORIZONTAL N/S	16010
HORIZONTAL E/W	15975

RECORD VESSEL FINAL AS-BUILT DIMENSIONS

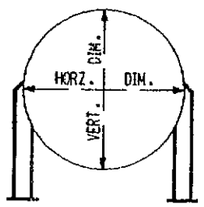

WHEN COMPLETE
FOREMAN: SEND CONSTRUCTION OFFICE ONE LEGIBLE AND WORK COPIES IF ANY
CONSTRUCTION OFFICE: KEEP ONE COPY IN CONSTRUCTION OFFICE FILE SEND LEGIBLE COPY TO ENGINEERING ASSIGNED

I CERTIFY THAT THIS RECORD IS COMPLETE AND ACCURATE IN ACCORDANCE WITH SECTION 5 OF DIVISION 4 OF THE Q.C. MANUAL.

Al Haynes
AL HAYNES
WELDING & Q.A. SUPERVISOR

7 JUNE 97
DATE

11-6-97

▶ INDICATES CHANGE FROM PREVIOUS ISSUE

BY	CHKD	DATE	BY	CHKD	DATE	BY	CHKD	DATE	MODIFICATION REMARKS	REVISIONS

ARABIAN CBI LTD.

RECORD DRAWING
16.0 M ID PROPANE SPHERE
IBN RUSHD PTA AND AROMATICS PLANT PROJECT
ARABIAN INDUSTRIAL FIBERS CO. LTD
YANBU, SAUDIA ARABIA

ITEM NO 101-0-001
BY KT CHKD WJH DATE 3-05-97
R L HERBERT
ENGINEERING SUPERVISOR

CONTRACT NO 965212
DWG R1 REV 0
SHT

This drawing is the property of ACBI and is to be used only in conjunction with the performance of work by ACBI. Reproduction in whole or in part is expressly forbidden.

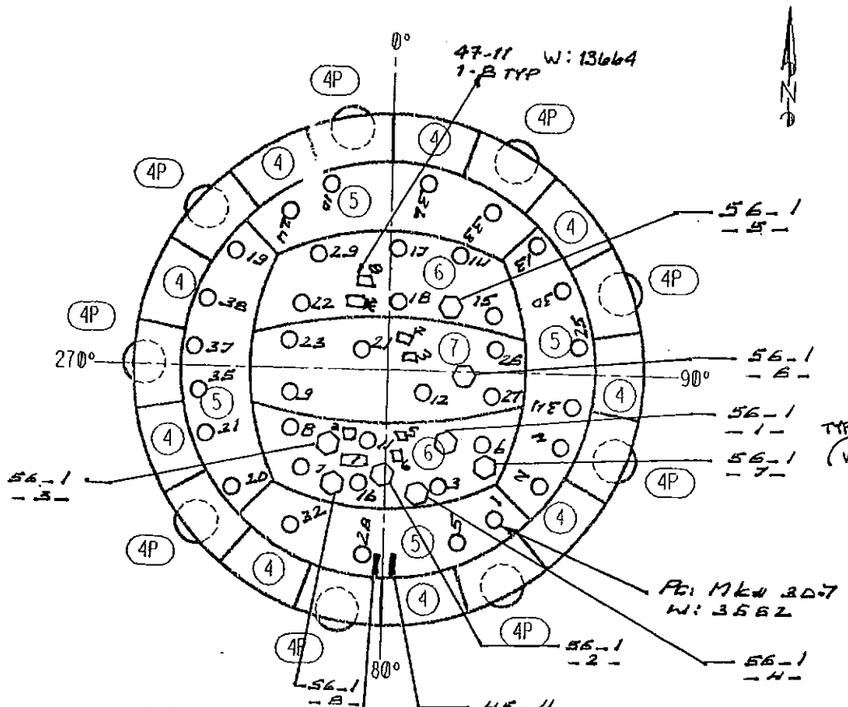

TOP PLAN

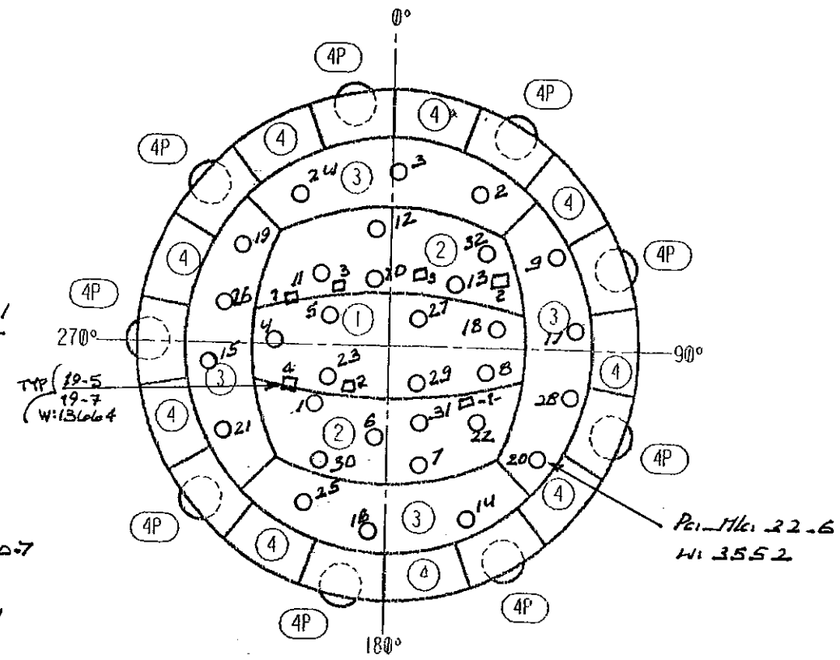

BOTTOM PLAN Pc: 34-12

(INSIDE VIEW)

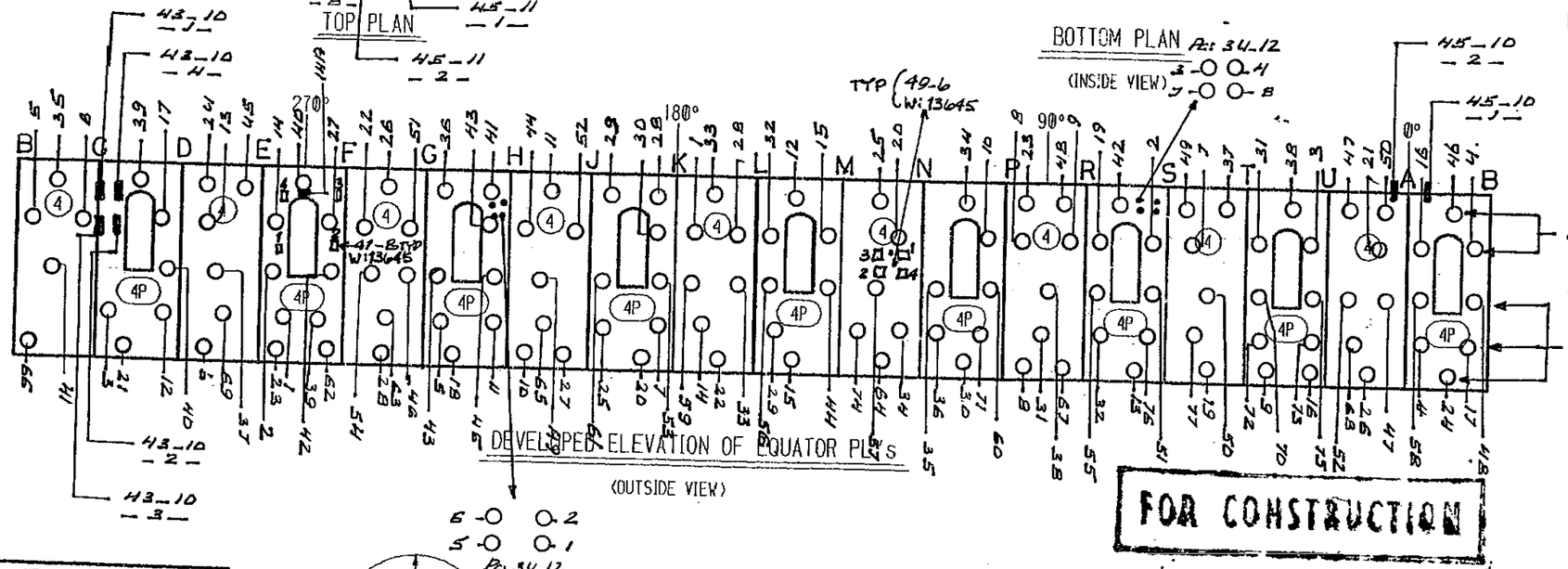

DEVELOPED ELEVATION OF EQUATOR PLTS

(OUTSIDE VIEW)

6-0 0-2

5-0 0-1

Pc: 34-12

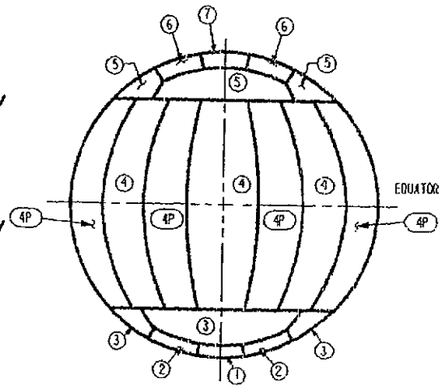

ELEVATION

FOR CONSTRUCTION

NDE PERSONNEL (MT & PT ONLY)		NAME OF WELDER	I.D.
F. E. KHAN	LEVEL II	M. S. KARIM	3562
K. M. HABBANIGA	LEVEL II		
LIST NDE PROCEDURES USED - (MT & PT ONLY)	JOINT I.D. IF REQ'D		
MT SYH. RQ11B			
MT B RQ11 7			
LIST WELD PROCEDURE	JOINT I.D. IF REQ'D		
FOR AUTHORIZED INSPECTOR ONLY			

INSTRUCTIONS:

1.) RECORD WELDERS I.D. ON EACH JOINT.
2.) RECORD JOINT I.D. & R.T. INTERVALS (FIRST & LAST FOR 100%) OR LOCATION FOR SPOT.
3.) RECORD MATERIAL I.D. FOR EACH PIECE OR ASSEMBLY.

VESSEL DIAMETER	
VERTICAL	X
HORIZONTAL N/S	X
HORIZONTAL E/W	X

RECORD VESSEL FINAL AS-BUILT DIMENSIONS

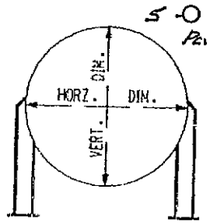

WHEN COMPLETE
FOREMAN: SEND CONSTRUCTION OFFICE ONE LEGIBLE AND WORK COPIES IF ANY
CONSTRUCTION OFFICE: KEEP ONE COPY IN CONSTRUCTION OFFICE FILE SEND LEGIBLE COPY TO ENGINEERING ASSIGNED

I CERTIFY THAT THIS RECORD IS COMPLETE AND ACCURATE IN ACCORDANCE WITH SECTION 5 OF DIVISION 4 OF THE O.C. MANUAL.

WELDING & O.A. SUPERVISOR — DATE: 10 JUNE 97

▶ INDICATES CHANGE FROM PREVIOUS ISSUE

REVISIONS	BY	CHKD	DATE

MODIFICATION/REMARKS

ARABIAN CBI LTD.

RECORD DRAWING
16.0 M ID PROPANE SPHERE
IBN RUSHD PTA AND AROMATICS PLANT PROJECT
ARABIAN INDUSTRIAL FIBERS CO. LTD
YANBU, SAUDIA ARABIA

ITEM NO 101-D-001 | CONTRACT NO 965212
BY KT CHKD WJH DATE 3-05-97
R L HERBERT
ENGINEERING SUPERVISOR
DWG RI | REV 0
SHT

This drawing is the property of ACBI and is to be used only in conjunction with the performance of work by ACBI. Reproduction in whole or in part is expressly forbidden.

TECHNICAL & CONSTRUCTION INFORMATION

SPECIFICATIONS	API 650-9th ED.(1993/94 ADD.)
	APP. E, F.1.2, & S (NON CERTIFIED)
SPECIFIC GRAVITY	1.050
SERVICE	ACETIC ACID
MAX DESIGN METAL TEMP.	85°C
MIN DESIGN METAL TEMP.	17°C
DESIGN PRESSURE	0.025 bar (g)
DESIGN VACUUM	0.006 bar (g)
DESIGN LIQUID LEVEL	15000 mm
DESIGN WIND VELOCITY	140 km/h (PER API 650)
SEISMIC	ZONE 1 (I=1.0 , S=1.2)
	PER API 650
ROOF LIVE LOAD	1.2 KPa PLUS VACUUM
NOMINAL CAPACITY	4710 m^3
PUMP IN RATE	120 m^3/hr
PUMP OUT RATE	85 m^3/hr
FOUNDATION	BY OTHERS
CONSTRUCTION	BY ARABIAN CBI
CORROSION ALLOWANCE	
BOTTOM	1.0 mm
SHELL	1.0 mm
ROOF	1.0 mm
STRUCTURAL	1.0 mm

MATERIAL SPEC	
BOTTOM RECT.	A240-316L
BOTTOM SKETCHES	A240-316L
SHELL PLATES	A240-316L
ROOF PLATES	A240-316L
STRUCTURAL	A479-316L & A36
FLANGES	A182-F316L
NOZZLE NECKS	A312-TP316L
INTERNAL PIPE	A312-TP316L
INSPECTION - MILL	CTR'S
SHOP	ACBI
FIELD	ACBI & CUSTOMER
SURFACE PREPARATION	YES
PAINTING	YES
PWHT	NONE
INSULATION	YES
MISC.	
GASKETS	REINZ-AMF34
BOLTS & NUTS	A193-B8M & A194-8M
RADIOGRAPHY	PER CODE
JOINT EFFICIENCY	N/A

DESIGN DATA

RING NO.	CORR. ALLOW. mm	DESIGN FOR PRODUCT PRODUCT SG= 1.050 ALLOWABLE STRESS MPa	DESIGN FOR PRODUCT PRODUCT SG= 1.050 REQUIRED THK. mm	DESIGN FOR TEST SG= 1.0 ALLOWABLE STRESS MPa	DESIGN FOR TEST SG= 1.0 REQUIRED THK. mm	THK. USED mm	MATERIAL SPECIFICATION	API MAT'L GROUP NO.
1	1.0	131.1	12.54	155.1	9.29	12.54	A240-316L	N/A
2	1.0	131.1	10.14	155.1	7.38	10.14	A240-316L	N/A
3	1.0	131.1	7.84	155.1	5.53	8.00	A240-316L	N/A
4	1.0	131.1	5.54	155.1	3.67	6.00	A240-316L	N/A
5	1.0	131.1	3.26	155.1	1.83	6.00	A240-316L	N/A

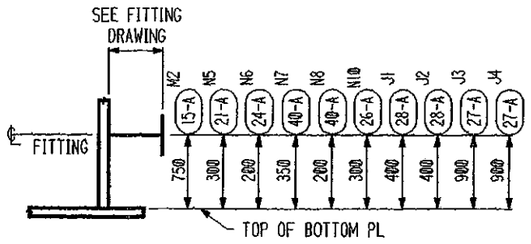

SHELL FITTING ELEVATION

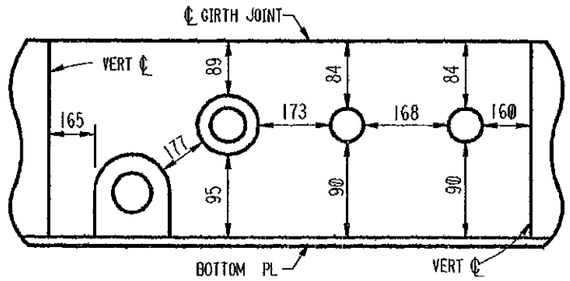

SKETCH 'A'
(BOTTOM RING ONLY)

LIST OF FITTINGS

CUST. MARK	ACBI MARK	QUANT	SIZE	RATING	DESCRIPTION
M1	30-A	1	24"	API	ROOF MANWAY
M2	15-A	1	24"	API	SHELL MANHOLE
N1	39-A	1	8"	150 RF	ROOF NOZZLE ACID FILL W/INT.
N2	36-A	1	3"	150 RF	ROOF NOZZ PUMP SPILLBACK W/INT.
N3	31-A	1	6"	150 RF	ROOF NOZZ VENT
N4	38-A	1	3"	150 RF	ROOF NOZZLE VAPOUR RETURN
N5	21-A	1	6"	150 RF	SHELL NOZZLE PUMP SUCTION
N6	24-A	1	3"	150 RF	SHELL NOZZLE DRAIN W/INT.
N7	40-A	1	2"	150 RF	SHELL NOZZLE STEAM IN
N8	40-A	1	2"	150 RF	SHELL NOZZLE STEAM OUT
N9	35-A	1	8"	150 RF	ROOF NOZZ LEVEL TEMP SERVO W/INT.
N10	26-A	1	6"	150 RF	SHELL NOZZLE SPARE
J8	42-A	1	12"	150 RF	ROOF NOZZLE (EMERGENCY VENT)
J1	28-A	1	4"	150 RF	SHELL NOZZLE LT
J2	28-A	1	4"	150 RF	SHELL NOZZLE LT
J3	27-A	1	2"	150 RF	SHELL NOZZLE TIC
J4	27-A	1	2"	150 RF	SHELL NOZZLE TI
J5	33-A	1	2"	150 RF	ROOF NOZZ (N_2 BLANKETING)
J6A/B	33-4	2	¾"	3000 CL	ROOF NOZZ (N_2 BLANKETING)
J7	32-A	1	3"	150 RF	ROOF NOZZLE PSV
J7A	43-A	1	6"	150 RF	ROOF NOZZLE VAC. VENT
	DWG#18	1			NAMEPLATE
		1			ROOF PLATFORM
		1			PERIPHERAL HANDRAIL
	DWG#50	1			SPIRAL STAIRWAY
	DWG#29	4			GROUNDING LUG
	DWG#41				HEATER COIL
	17-A	1	36"		SUMP
	DWG#19				ANCHOR CHAIRS
	DWG#12/13				INSULATION SUPPORTS
		1			DRIP RING
		1 SET			CATHODIC PROTECTION (EXT.)
	DWG#35	1			STILLING WELL

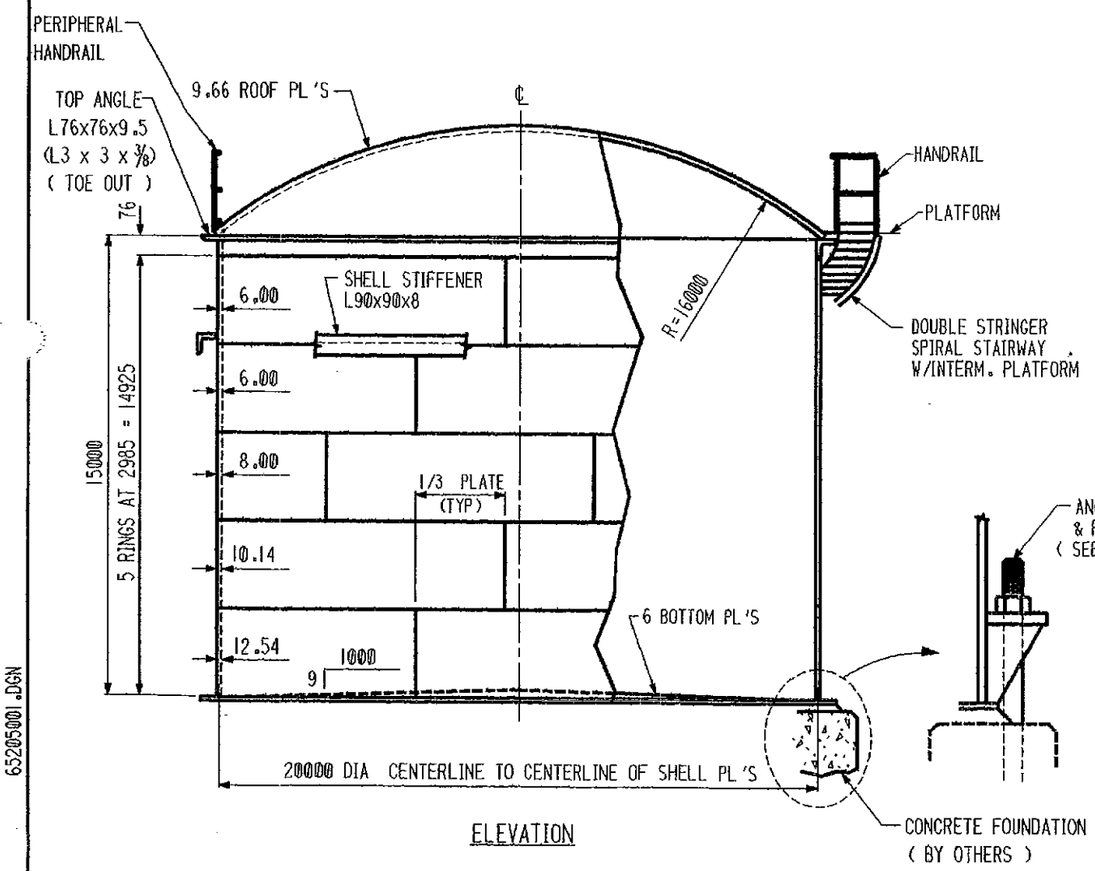

ELEVATION

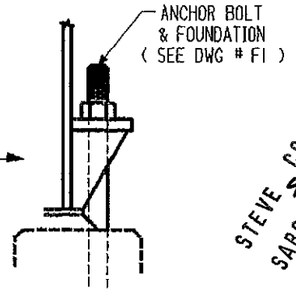

GENERAL NOTES:

1. FITTINGS TO BE LOCATED AS SHOWN ON ORIENTATION DRAWING(S) . IF LOCATIONS ARE NOT GIVEN, LOCATE IN FIELD TO SUIT CUSTOMER MAINTAINING MINIMUM SPACING SHOWN IN SKETCH 'A'. DIMENSIONS GIVEN ARE FROM EDGE TO EDGE OF REINFORCING PL OR FROM CL OF BUTT WELD TO EDGE OF REINFORCING PL.
2. FLANGE BOLT HOLES TO STRADDLE VERTICAL CENTERLINE FOR SHELL NOZZLES.
3. FLANGE BOLT HOLES TO STRADDLE 0°-180° CENTERLINE FOR ROOF NOZZLES.
4. SEE SHEETS 800 & 802 FOR MATERIAL MANAGEMENT.

IR 1 Jun 99

STEVE COYLE SABCO QA/QC 16MAY 1999

AS-BUILT
RTT ACBL

ACETIC ACID STORAGE TANK

BECHTEL LTD CONTRACT No. 22854-LCC-005 (22854-000-F-001)

ARABIAN CBI LTD.

GENERAL ARRANGEMENT
20.0m DIA. x 15.0m HIGH SS DRT
IBN RUSHD PTA AND AROMATICS PLANT PROJECT
ARABIAN INDUSTRIAL FIBERS CO. LTD
YANBU, SAUDI ARABIA

ITEM NO 102-F-001
BY Kev CHKD MSTG DATE 3/15/96
R L HERBERT
ENGINEERING SUPERVISOR

CONTRACT NO ED 965205
DWG 1 REV 8
SHT

REVISIONS: 6 BY K.T. CHKD RLH DATE 10-21-96 REISSUE; 8 BY KWB CHKD RLH DATE 6/23/97 CHG GASKET SPEC.; 7 BY SSN CHKD RLH DATE 01/29/97 REVISED LIST OF FITTING

MODIFICATION/REMARKS

INDICATES CHANGE FROM PREVIOUS ISSUE

This drawing is the property of ACBI and is to be used only in conjunction with the performance of work by ACBI. Reproduction in whole or in part is expressly forbidden.

65205001.DGN

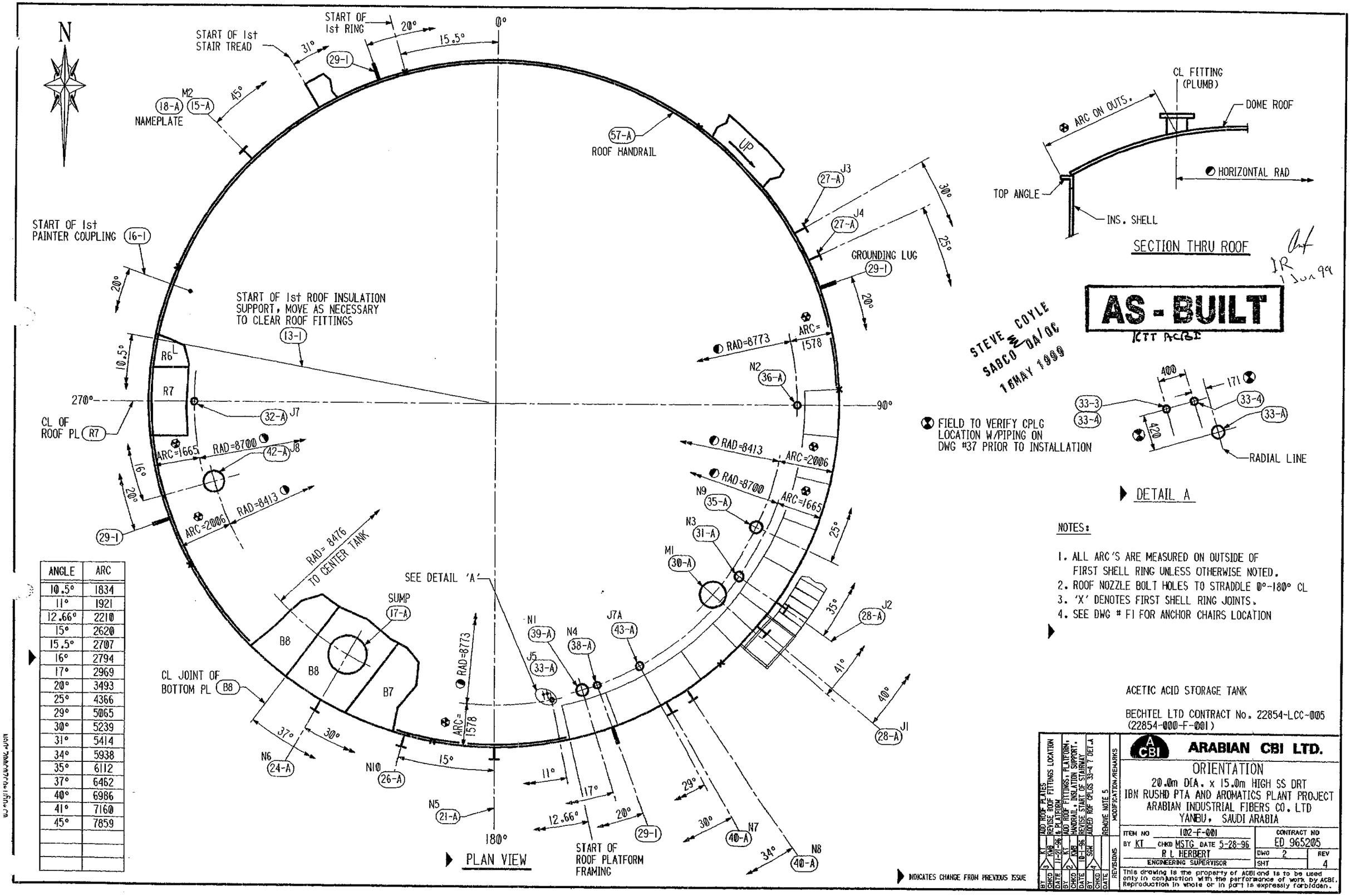

ANGLE	ARC
10.5°	1834
11°	1921
12.66°	2210
15°	2620
15.5°	2707
16°	2794
17°	2969
20°	3493
25°	4366
29°	5065
30°	5239
31°	5414
34°	5938
35°	6112
37°	6462
40°	6986
41°	7160
45°	7859

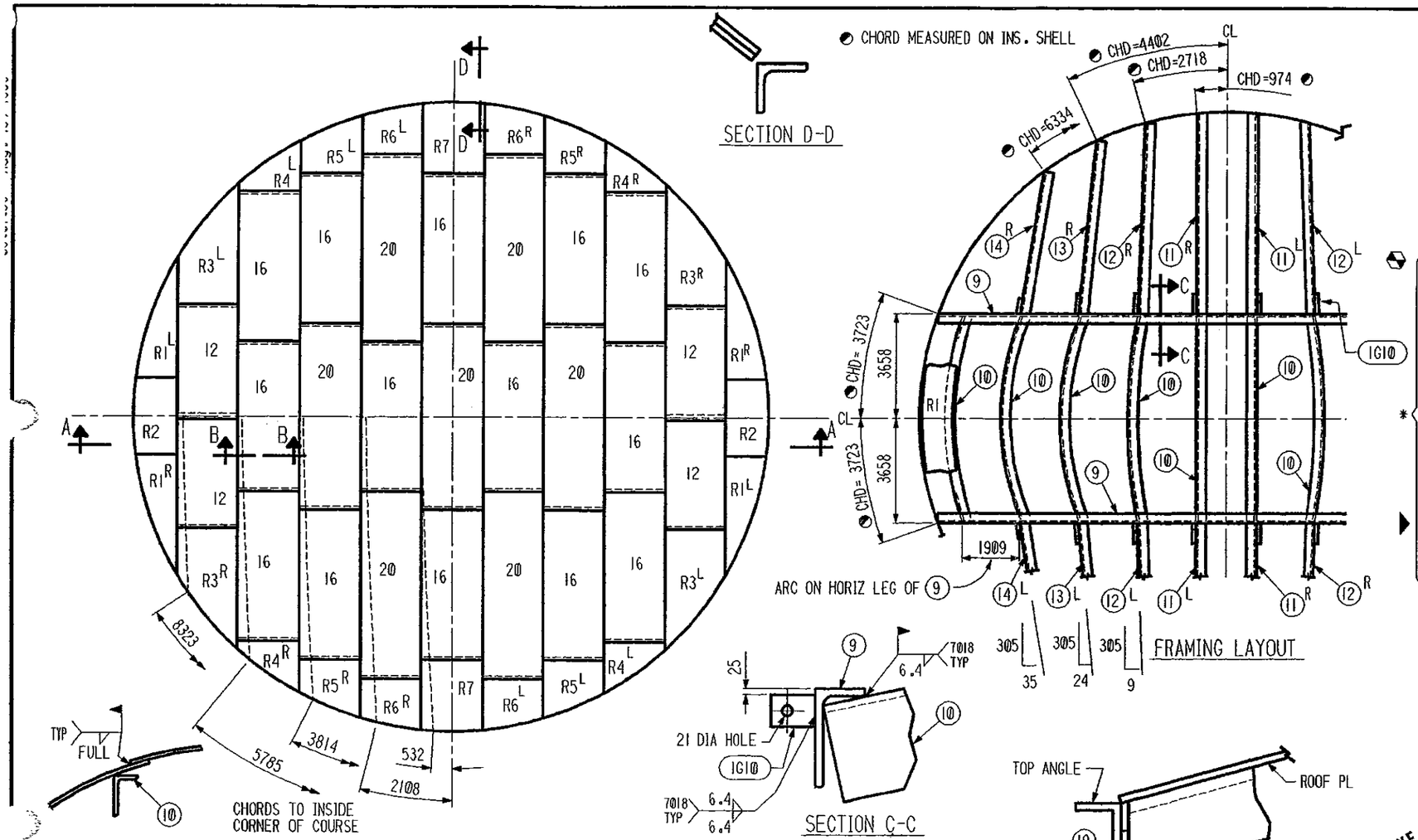

SHIP PC	MARK	ASSM PC	DESCRIPTION	LENGTH MM	SPEC	ID
			DOME ROOF			
4	R1 R/L		PL SK x 9.66 (CF 2000 x 6096 C2)		A240-316L	Bc
2	R2		PL SK x 9.66 (CF 2000 x 4877)		A240-316L	Bc
4	R3 R/L		PL SK x 9.66 (CF 2000 x 7315)		A240-316L	Bc
4	R4 R/L		PL SK x 9.66 (CF 2000 x 7315 C2)		A240-316L	Bc
4	R5 R/L		PL SK x 9.66 (CW R3)		A240-316L	Bc
4	R6 R/L		PL SK x 9.66 (CF 2000 x 4877 C2)		A240-316L	Bc
2	R7		PL SK x 9.66 (CW R4)		A240-316L	Bc
7	20		PL 2000 x 9.66	6069	A240-316L	Bc
14	16		PL 2000 x 9.66	4877	A240-316L	Bc
4	12		PL 2000 x 9.66	3657	A240-316L	Bc
2	8-A		MAIN ANGLE ASSEMBLY			
	8-9	4	L200 x 100 x 15 x SK FIN	10121	A36	C
			FIN ON RAD=15576 SHR	11031		
	1G10	16	BAR 65 x 10	89	A36	C
10	8-10		L200 x 100 x 12 FIN	7364	A36	C
			FIN ON RAD=16000 SHR	8364		
4	8-11 L/R		L200 x 100 x 12 x SK FIN	7172	A36	C
			FIN ON RAD=15970 SHR	8135		
4	8-12 L/R		L150 x 75 x 12 x SK FIN	6731	A36	C
			FIN ON RAD=15720 SHR	7735		
4	8-13 L/R		L150 x 75 x 12 x SK FIN	5983	A36	C
			FIN ON RAD=15201 SHR	6989		
4	8-14 L/R		L150 x 75 x 12 x SK FIN	4739	A36	C
			FIN ON RAD=14450 SHR	5749		
52	8-16		BAR 50 x 6 x SK	280	A36	D
18	8-17		BOLT 3/4" DIA HVY HEX	38	A307B	D
18	8-18		NUT 3/4" DIA HVY HEX		A563A	D
20	8-19		PL 150 x 5 W/RAD CORNERS	150	A240-T304L	Bc

MAYBE SHIPPED IN TWO PIECES

* = SEE NOTE #5

LENGTH OF 9.66 WELDS FOR ROOF PLATES (m)
ROOF TO TOP ANGLE = 62.8
LAP DOWN = 59.8
LAP SLOPING = 197.9
LAP OVERHEAD (IF REQ'D.) = 261.6

SHOP NOTE:
ALL PLATES 9.66mm THICK
PLATE DIM'S ARE TO EDGE OF PL ON WHICH THEY APPEAR
TRIM SK. PLATES TO 11801 RAD IN FLAT BEFORE DISHING

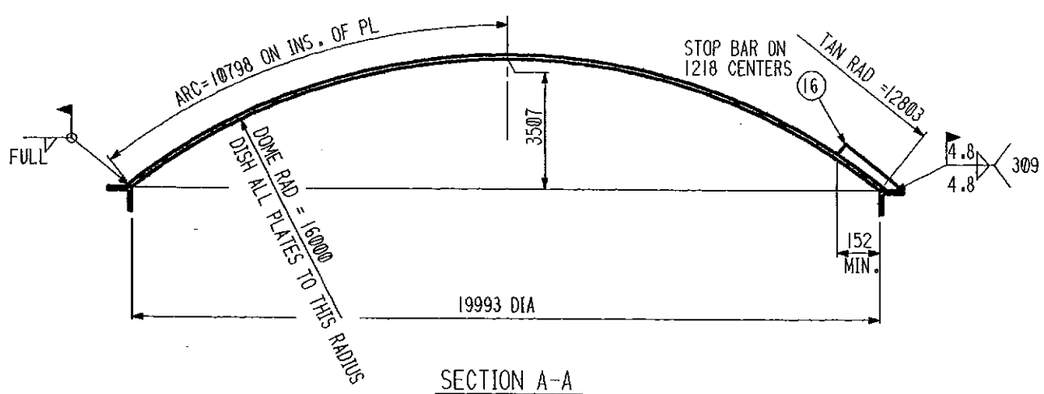

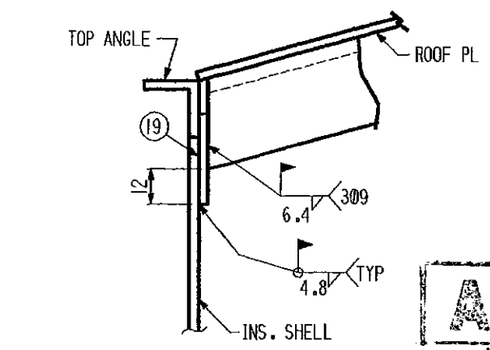

WELDING DETAIL TEMORARY FRAMING TO SHELL

STEVE COYLE
SABCO QA/QC
16MAY 1999

IR
1 Jun 99

AS-BUILT
KTT ACBI

NOTE:
1. WORK THIS DWG WITH DWG # 9 & 10.
2. ALL WELDING TO BE DONE USING 316L ELECTRODE. UNLESS OTHERWISE NOTED.

FIELD NOTES:
1. ROOF SKETCH PLATES NUMBERED IN ORDER OF ERECTION. USE THE CHORDS SHOWN FOR LOCATING CORNER OF SKETCH PLATE.
2. NOTE THAT PLATE COURSES ARE 90° TO THE LONG CONTINUOUS ANGLE.
3. MINIMUM LAP IS 26mm. LAP BETWEEN ADJACENT COURSES WILL INCREASE TO A MAXIMUM AT THE TOP ANGLE. SKETCH PLATE LOCATING CHORDS AND SKETCH PLATE SIZES ARE BASED ON 38mm LAP.
4. BEFORE COMPLETING ERECTION OF FRAMING, 181 kg TOTAL IS THE MAXIMUM PERMISSIBLE CONCENTRATED LOAD ON THE FRAMING.
5. FRAMING TO BE REMOVED AFTER ROOF IS COMPLETE.

INDICATES CHANGE FROM PREVIOUS ISSUE

ACETIC ACID STORAGE TANK

BECHTEL LTD CONTRACT No. 22854-LCC-005
(22854-000-F-001)

BY	CHKD	DATE	MODIFICATION/REMARKS
KT	RJH	12-13-96	REVISE WELD DETAIL. REMOVE PC '8-15'
RJH	ZN	12-13-96	REVISED BILL OF MATERIAL
RJH	RJH	8/19/96	REVISED WELD TAILS AND ADDED NOTE
KMM	RJH	6-20-96	

REVISIONS

ARABIAN CBI LTD.

DOME ROOF
20.0m DIA. x 15.0m HIGH SS DRT
IBN RUSHD PTA AND AROMATICS PLANT PROJECT
ARABIAN INDUSTRIAL FIBERS CO. LTD
YANBU, SAUDI ARABIA

ITEM NO 102-F-001
BY Kev CHKD MSTG DATE 5/1/96
R L HERBERT
ENGINEERING SUPERVISOR

CONTRACT NO ED 965205
DWG 8 REV 3
SHT

This drawing is the property of ACBI and is to be used only in conjunction with the performance of work by ACBI. Reproduction in whole or in part is expressly forbidden.

NAME OF WELDER	I.D.
M. KHAN	3550
Z. KHATTAK	3457
M.M. HAFIZ	3714
S. KHAN	4482
M. SARFARAZ	4521
N. NIR	4530

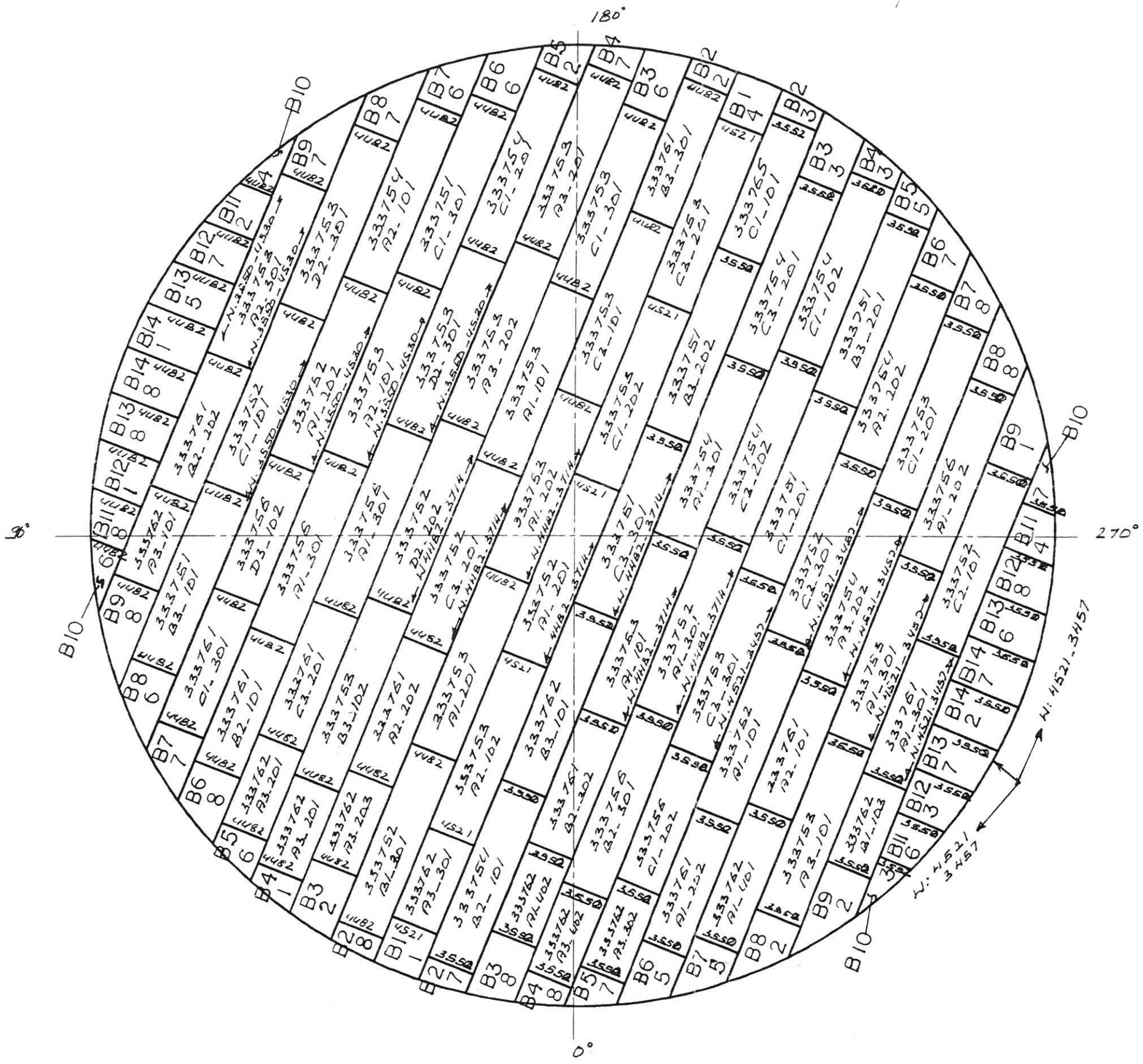

FOREMAN:

1. RECORD WELDERS' I.D. ON EACH JOINT.
2. RECORD JOINT ID AND RT INTERVALS (FIRST & LAST FOR 100%) OR LOCATION FOR SPOT RADIOGRAPHS OR PLUGS.

WHEN COMPLETE

FOREMAN:
SEND CONSTRUCTION OFFICE ONE LEGIBLE COPY AND WORK COPIES IF ANY

FOR CONSTRUCTION

BENZENE STORAGE TANK

BECHTEL LTD CONTRACT No. 22854-LCC-005

BOTTOM STRETCHOUT

INDICATES CHANGE FROM PREVIOUS ISSUE

REVISIONS: BY / CHKD / DATE

MODIFICATION/REMARKS

ARABIAN CBI LTD.

BOTTOM STRETCHOUT
51.0m DIA. x 22.0m HIGH URT
IBN RUSHD PTA AND AROMATICS PLANT PROJECT
ARABIAN INDUSTRIAL FIBERS CO. LTD
YANBU, SAUDI ARABIA

ITEM NO 103-F-001
BY ZW CHKD RLH DATE 7/8/96
R L HERBERT
ENGINEERING SUPERVISOR

CONTRACT NO ED 965202
DWG R2A SHT REV 0

This drawing is the property of ACBI and is to be used only in conjunction with the performance of work by ACBI. Reproduction in whole or in part is expressly forbidden.

11-2-97

002

13:05:24 JUL. 8, 1996
NGP: D2A2D2.DGN

NAME OF WELDER	I.D.
C. K. PATHAN	3807
M. KHAN	3550
J. H. PATEL	17625

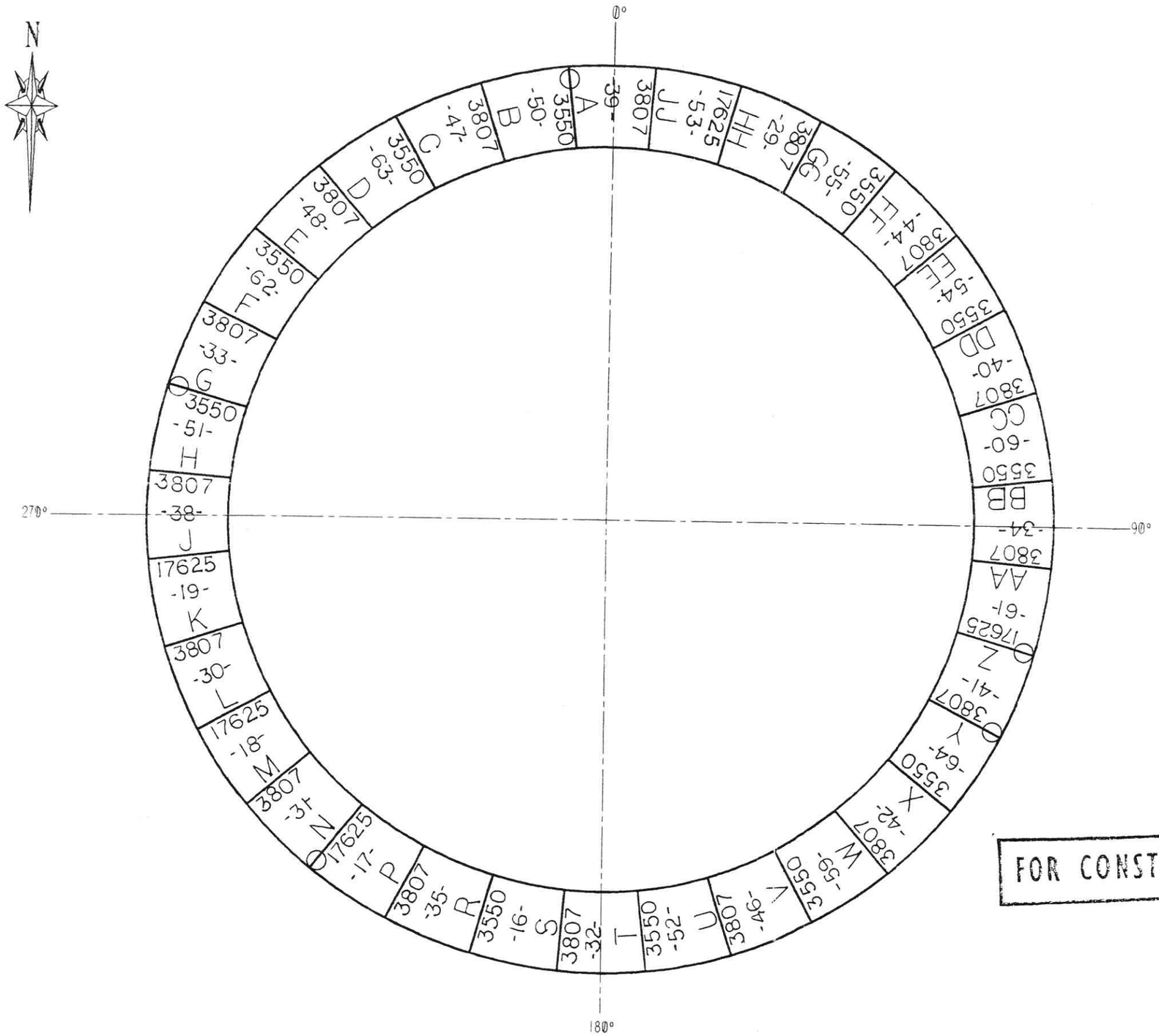

ANNULAR PLATE STRETCHOUT

FOREMAN:

1. RECORD WELDERS' I.D. ON EACH JOINT.
2. RECORD JOINT ID AND RT INTERVALS (FIRST & LAST FOR 100%) OR LOCATION FOR SPOT RADIOGRAPHS OR PLUGS.

WHEN COMPLETE

FOREMAN:
SEND CONSTRUCTION OFFICE ONE LEGIBLE COPY AND WORK COPIES IF ANY

N. A. UMAIRAN
JAIICO

FOR CONSTRUCTION

BENZENE STORAGE TANK

BECHTEL LTD CONTRACT No. 22854-LCC-005

▶ INDICATES CHANGE FROM PREVIOUS ISSUE

REVISIONS	BY	CHKD	DATE	MODIFICATION/REMARKS
	ZW	RLH	8/19/96	PLAN REVISE

ARABIAN CBI LTD.

ANNULAR PLATE STRETCHOUT
51.0m DIA. x 22.0m HIGH URT
IBN RUSHD PTA AND AROMATICS PLANT PROJECT
ARABIAN INDUSTRIAL FIBERS CO. LTD
YANBU, SAUDI ARABIA

ITEM NO 103-F-001
BY ZW CHKD RLH DATE 7/8/96
R L HERBERT
ENGINEERING SUPERVISOR

CONTRACT NO ED 965202
DWG R3A REV
SHT 1

This drawing is the property of ACBI and is to be used only in conjunction with the performance of work by ACBI. Reproduction in whole or in part is expressly forbidden.

13:08:58 Oct. 2, 1996

TECHNICAL & CONSTRUCTION INFORMATION

SPECIFICATIONS	API 650-9th ED. (1993/94 ADD.)
	APP. E,F.1.2 & H
SPECIFIC GRAVITY	0.857
SERVICE	BENZENE
MAX DESIGN METAL TEMP.	85°C
MIN DESIGN METAL TEMP.	17°C
DESIGN PRESSURE	0.025 bar (g)
DESIGN VACUUM	0.006 bar (g)
DESIGN LIQUID LEVEL	19600 mm
DESIGN WIND VELOCITY	140 km/h (PER API 650)
SEISMIC	ZONE 1 (I=1.0 , S=1.2)
	PER API 650
ROOF LIVE LOAD	1.2 KPa PLUS VACUUM
NOMINAL CAPACITY	40030 m^3
PUMP IN RATE	51 m^3/hr
PUMP OUT RATE	1000 m^3/hr
FOUNDATION	BY OTHERS
CONSTRUCTION	BY ARABIAN CBI
CORROSION ALLOWANCE	
BOTTOM	1.0 mm
SHELL	1.0 mm
ROOF	1.0 mm
STRUCTURAL	1.0 mm (TOTAL)

MATERIAL SPEC	
BOTTOM RECT.	A36
BOTTOM SKETCHES	A36
ANNULAR PLATES	A36
SHELL PLATES	ISO 630-FE510C & A36
ROOF PLATES	A36
STRUCTURAL	A36
FLANGES	A105
NOZZLE NECKS	A106B
INTERNAL PIPE	A106B
INSPECTION - MILL	CTR'S
SHOP	ACBI
FIELD	ACBI & CUSTOMER
SURFACE PREPARATION	YES
PAINTING	YES
PWHT	ALL REINF. NOZZ. IN 1st RING
INSULATION	NO
MISC.	
GASKETS	REINZ-AFM37
BOLTS & NUTS	A193-B7 & A194-2H
RADIOGRAPHY	PER CODE
JOINT EFFICIENCY	N/A

DESIGN DATA

RING NO.	CORR. ALLOW. mm	DESIGN FOR PRODUCT PRODUCT SG= 0.857 ALLOWABLE STRESS MPa	DESIGN FOR PRODUCT PRODUCT SG= 0.857 REQUIRED THK. mm	DESIGN FOR TEST SG= 1.0 ALLOWABLE STRESS MPa	DESIGN FOR TEST SG= 1.0 REQUIRED THK. mm	THK. USED mm	MATERIAL SPECIFICATION	API MAT'L GROUP NO.
1	1.0	206.8	21.30	221.6	22.10	22.10	ISO 630-FE510C	IV
2	1.0	206.8	17.95	221.6	18.42	18.42	ISO 630-FE510C	IV
3	1.0	206.8	15.19	221.6	15.41	15.41	ISO 630-FE510C	IV
4	1.0	206.8	12.43	221.6	12.42	12.45	ISO 630-FE510C	IV
5	1.0	206.8	9.69	221.6	9.43	10.21	ISO 630-FE510C	IV
6	1.0	160.0	8.97	171.7	8.68	10.00	A36	I
7	1.0	160.0	5.09	171.7	4.43	10.00	A36	I
8	1.0	160.0	1.69	171.7	0.74	10.00	A36	I

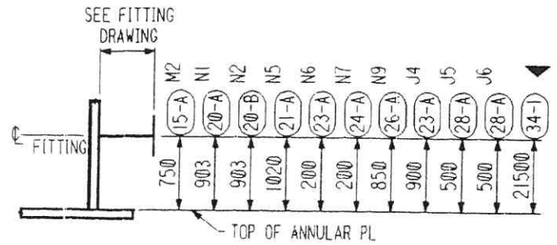

SHELL FITTING ELEVATION

LIST OF FITTINGS

CUST. MARK	ACBI MARK	QUANT	SIZE	RATING	DESCRIPTION
M1	30-A	1	30"	API	ROOF MANWAY
M2	15-A	1	24"	API	SHELL MANHOLE
N1	20-A	1	10"	150 RF	SHELL NOZZLE INLET
N2	20-B	1	10"	300 RF	SHELL NOZZLE PUMP SPILLBACK
N3	31-A	1	6"	150 RF	ROOF NOZZLE VENT
J3A	39-A	1	12"	150 RF	VENT
N5	21-A	1	20"	150 RF	SHELL NOZZLE PUMP SUCTION W/INT.
N6	23-A	1	2"	150 RF	SHELL NOZZLE PURGE CONNECTION
N7	24-A	1	6"	150 RF	SHELL NOZZLE DRAIN W/INT.
N8	25-A	1	8"	150 RF	ROOF NOZZLE LEVEL SERVICE W/INT.
N9	26-A	1	6"	150 RF	SHELL NOZZLE SPARE
-	34-1	5	8"	150 RF	FOAM CHAMBER
J1	33-A	1	2"	150 RF	ROOF NOZZLE (N_2 BLANKETING)
J2A/B	33-4	2	¾"	3000 CL	ROOF NOZZLE (N_2 BLANKETING)
J3	32-A	1	10"	150 RF	ROOF NOZZLE (PSV)
J4	23-A	1	2"	150 RF	SHELL NOZZLE TI
J5	28-A	1	4"	150 RF	SHELL NOZZLE LI
J6	28-A	1	4"	150 RF	SHELL NOZZLE LALL/LAHH
	17-A	1	60"		SUMP
	DWG #18	1			NAMEPLATE
		1			PERIPHERAL HANDRAIL
	DWG #50	1			SPIRAL STAIRWAY
		1			VACONODECK
	DWG #19				ANCHOR CHAIRS
		1 SET			CATHODIC PROTECTION (EXT.)
	DWG #45				DELUGE SYSTEM
	DWG #29	4			GROUNDING LUGS
	DWG #35	1			STILLING WELL
J7	12-A	1	12"		ROOF NOZZLE (EMERGENCY VENT)

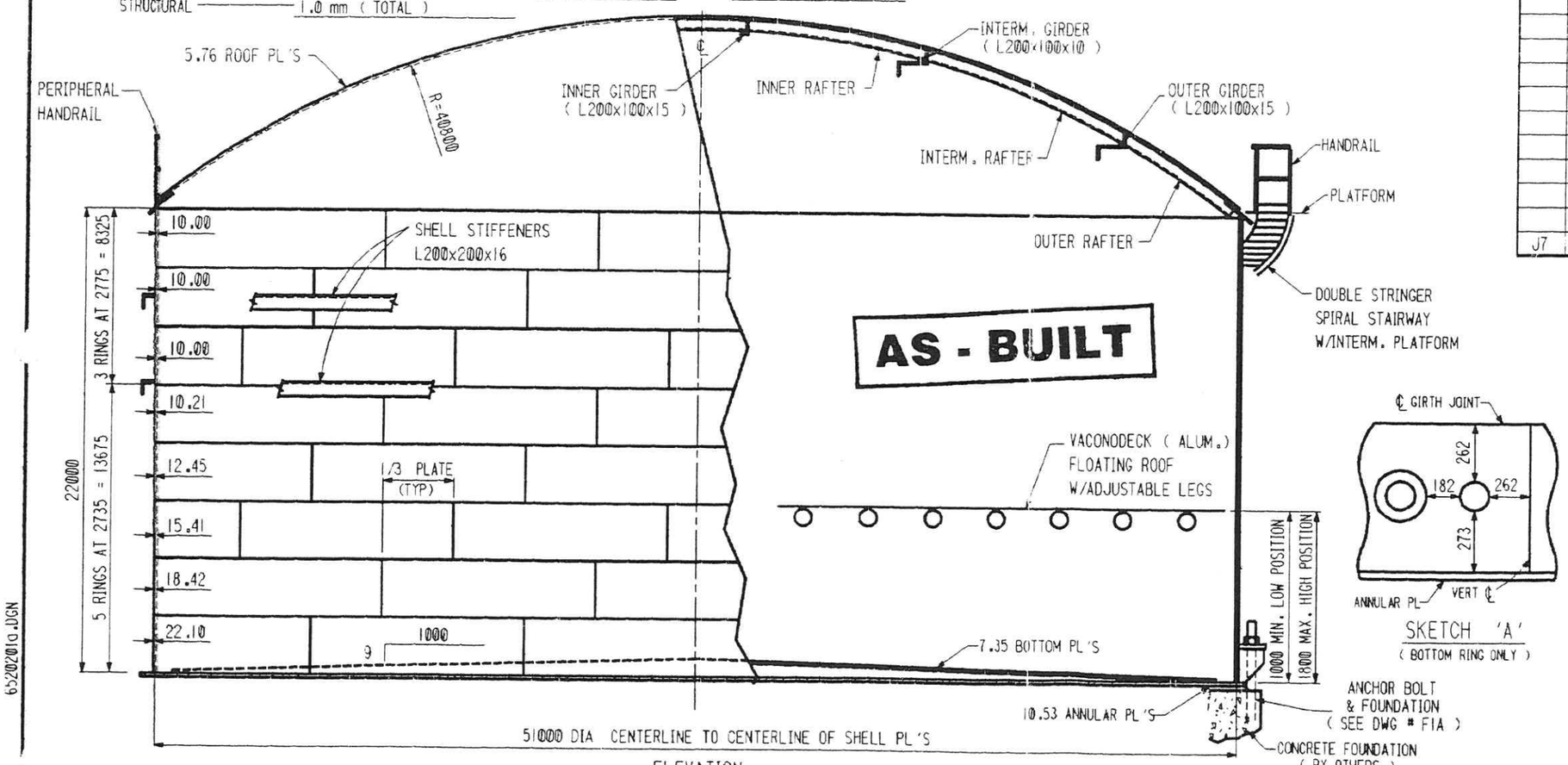

ELEVATION

SKETCH 'A'
(BOTTOM RING ONLY)

GENERAL NOTES:

1. FITTINGS TO BE LOCATED AS SHOWN ON ORIENTATION DRAWING(S). IF LOCATIONS ARE NOT GIVEN, LOCATE IN FIELD TO SUIT CUSTOMER MAINTAINING MINIMUM SPACING SHOWN IN SKETCH 'A'. DIMENSIONS GIVEN ARE FROM EDGE TO EDGE OF REINFORCING PL OR FROM CL OF BUTT WELD TO EDGE OF REINFORCING PL. THE LOCATION DIMENSION SHOWN IN SKETCH 'A' ARE ONLY FOR NOZZLES 2" DIA AND LESS
2. FLANGE BOLT HOLES TO STRADDLE VERTICAL CENTERLINE FOR SHELL NOZZLES.
3. FLANGE BOLT HOLES TO STRADDLE 0°-180° CENTERLINE FOR ROOF NOZZLES
4. SEE SHEETS 800 & 802 FOR MATERIAL MANAGEMENT.

DETAILED FOR (1) TANK - (1) TANK REQUIRED

BENZENE STORAGE TANK

BECHTEL LTD CONTRACT No. 22854-LCC-005
(22854-000-F-001)

▶ INDICATES CHANGE FROM PREVIOUS ISSUE

REVISIONS	BY	CHKD	DATE	MODIFICATION/REMARKS
3	KM	RLH	8/13/96	CHG'D LIST OF MATERIAL NOTE ADDED
5	DAN	RLH	1-27-97	REVISE LIST OF FITTINGS ADD 34-1 TO FITTING ELEVATION
4	KM	RLH	10-2-96	REVISE LIST OF FITTINGS

ARABIAN CBI LTD.

GENERAL ARRANGEMENT
51.0m DIA. x 22.0m HIGH URT
IBN RUSHD PTA AND AROMATICS PLANT PROJECT
ARABIAN INDUSTRIAL FIBERS CO. LTD
YANBU, SAUDI ARABIA

ITEM NO 103-F-001
BY Kev CHKD MSTG DATE 3/15/96
R L HERBERT
ENGINEERING SUPERVISOR

CONTRACT NO ED 965202
DWG 1A SHT REV 5

This drawing is the property of ACBI and is to be used only in conjunction with the performance of work by ACBI. Reproduction in whole or in part is expressly forbidden.

652020101.DGN

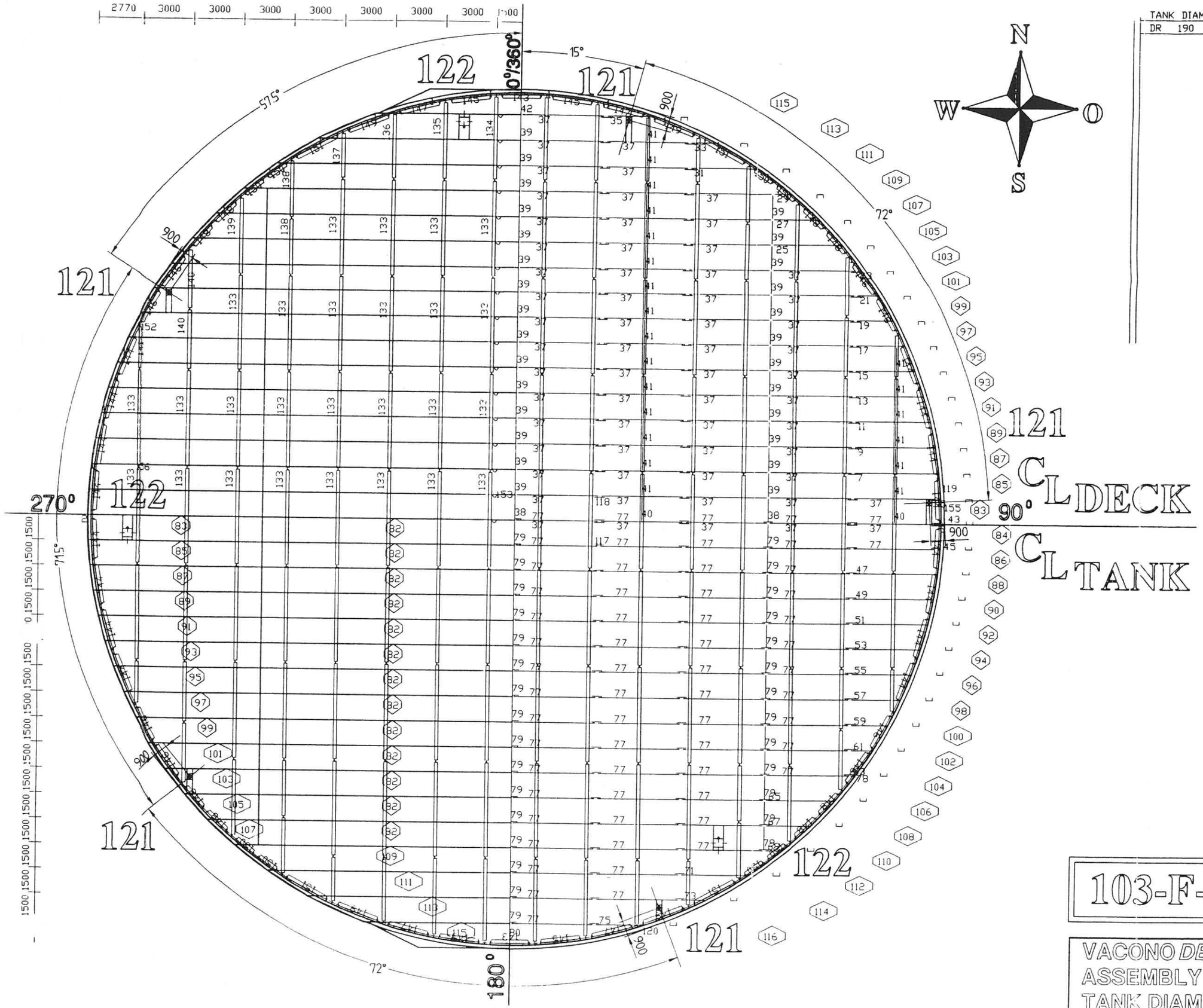

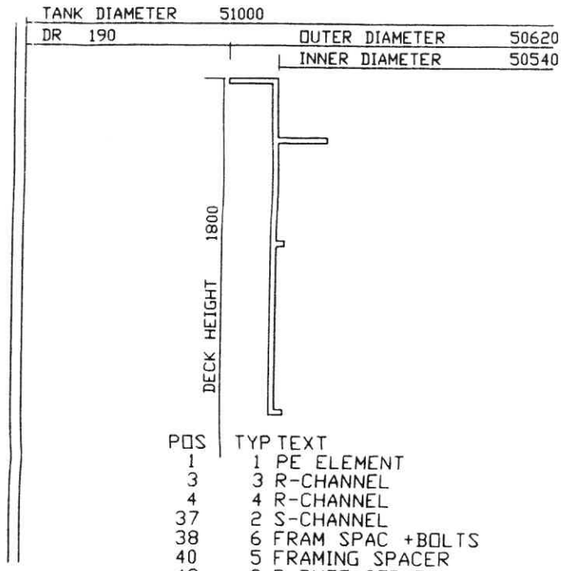

POS	TYP	TEXT
1	1	PE ELEMENT
3	3	R-CHANNEL
4	4	R-CHANNEL
37	2	S-CHANNEL
38	6	FRAM SPAC +BOLTS
40	5	FRAMING SPACER
43	8	R-BUTT STRAP
44	9	R-BUTT STRAP
77	7	S-BUTT STRAP
78	10	PE-BUTT STRAP
79	11	T-BUTT STRAP
80	12	R-T-BUTT STRAP
81	13	SEALING BLOCK
82	14	S-SHEET
83	15	R-SHEET
84	16	R-SHEET
115	18	END-R-SHEET
116	19	END-R-SHEET
117	23	CON.BUTT STRAP
118	24	CHANNEL CON
119	25	CONNECTION F. PE
120	48	VACONOSEAL PE Db
121	64	CABLE GUIDE SS
122	68	MANHOLE VII AL
123	74	FUNNEL 8 AL
125	1356	NEG.DEV.LADDER
126	96	DRAIN PIPE
127	130	SEALING PASTE
133	21	FLOAT
152	22	FLOAT ADAPTER
153	26	FLOAT BRACKET
155	57	P-ADJ.LEG+PLUG A
156	61	F-ADJ.LEG+PLUG A
157	31	BOLT M8*20
158	32	BOLT M8*35
159	33	BOLT M8*55
160	34	NUT M8
161	38	SPEC BOLT M8*35S
162	36	BOLT M8*65
163	37	RIVET 4.8*14.3
167	129	ANTIROT.GASTIGHT
168	66	CABLE 05 SS
169	67	ANTISTATIC SYS
170	113	INDICATING PLATE

103-F-001

Revision:
a) •
b) •
c) •

SCALE FIXED
ORDER NO. 04998/7

VACONO DECK®
ASSEMBLY DRAWING
TANK DIAMETER 51,0m

006

CUSTOMER
BN BECHTEL-YANBU
SAUDI AR 103-F-001

Drawn: 20.06.96
Checked: 20.06.96

10:54:21 Oct. 2, 1996

TECHNICAL & CONSTRUCTION INFORMATION

SPECIFICATIONS	API 650-9th ED.(1993/94 ADD) APP. E,F.1.2 & H
SPECIFIC GRAVITY	0.846
SERVICE	PARA-XYLENE
MAX DESIGN METAL TEMP.	85°C
MIN DESIGN METAL TEMP.	17°C
DESIGN PRESSURE	0.025 bar (g)
DESIGN VACUUM	0.006 bar (g)
DESIGN LIQUID LEVEL	19100 mm
DESIGN WIND VELOCITY	140 km/h (PER API 650)
SEISMIC	ZONE 1 (I=1.0 , S=1.2) PER API 650
ROOF LIVE LOAD	1.2 KPa PLUS VACUUM
NOMINAL CAPACITY	24000 m^3
PUMP IN RATE	55 m^3/hr
PUMP OUT RATE	1000 m^3/hr
FOUNDATION	BY OTHERS
CONSTRUCTION	BY ARABIAN CBI
CORROSION ALLOWANCE	
BOTTOM	1.0 mm
SHELL	1.0 mm
ROOF	1.0 mm
STRUCTURAL	1.0 mm (TOTAL)

MATERIAL SPEC	
BOTTOM RECT.	A36
BOTTOM SKETCHES	A36
ANNULAR PLATES	A36
SHELL PLATES	ISO 630-FE510C & A36
ROOF PLATES	A36
STRUCTURAL	A36
FLANGES	A105
NOZZLE NECKS	A106B
INTERNAL PIPE	A106B
INSPECTION - MILL	CTR'S
SHOP	ACBI
FIELD	ACBI & CUSTOMER
SURFACE PREPARATION	YES
PAINTING	YES
PWHT	ALL REINF. NOZZ. IN 1st RING
INSULATION	YES
MISC.	
GASKETS	REINZ-AFM37
BOLTS & NUTS	A193-B7 & A194-2H
RADIOGRAPHY	PER CODE
JOINT EFFICIENCY	N/A

DESIGN DATA

RING NO.	CORR. ALLOW. mm	DESIGN FOR PRODUCT PRODUCT SG= 0.846 ALLOWABLE STRESS MPa	REQUIRED THK. mm	DESIGN FOR TEST SG= 1.0 ALLOWABLE STRESS MPa	REQUIRED THK. mm	THK. USED mm	MATERIAL SPECIFICATION	API MAT'L GROUP NO.
1	1.0	206.8	16.31	221.6	16.89	16.89	ISO 630-FE510C	IV
2	1.0	206.8	13.87	221.6	14.17	14.17	ISO 630-FE510C	IV
3	1.0	206.8	11.72	221.6	11.80	11.80	ISO 630-FE510C	IV
4	1.0	206.8	9.57	221.6	9.44	9.57	ISO 630-FE510C	IV
5	1.0	206.8	7.43	221.6	7.08	8.20	ISO 630-FE510C	IV
6	1.0	160.0	6.58	171.7	6.14	8.20	A36	I
7	1.0	160.0	3.76	171.7	3.03	8.20	A36	I
8	1.0	160.0	1.12	171.7	0.13	8.20	A36	I

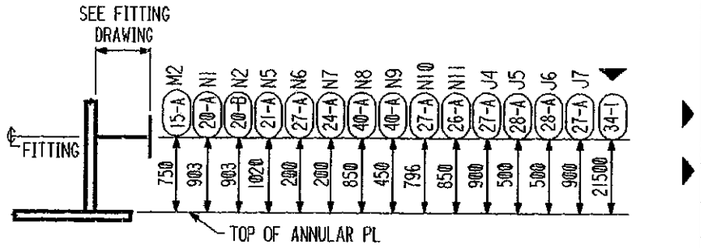

SHELL FITTING ELEVATION

LIST OF FITTINGS

CUST. MARK	ACBI MARK	QUANT	SIZE	RATING	DESCRIPTION
M1	30-A	1	30"	API	ROOF MANWAY
M2	15-A	1	24"	API	SHELL MANHOLE
N1	20-A	1	10"	150 RF	SHELL NOZZLE INLET
N2	20-B	1	10"	300 RF	SHELL NOZZLE PUMP SPILLBACK
N3	31-A	1	6"	150 RF	ROOF NOZZLE VENT
J3A	39-A	1	6"	150 RF	ROOF P/V VENT ◀
N5	21-A	1	20"	150 RF	SHELL NOZZLE PUMP SUCTION W/INT.
N6	27-A	1	2"	150 RF	SHELL NOZZLE PURGE CONNECTION
N7	24-A	1	6"	150 RF	SHELL NOZZLE DRAIN W/INT.
N8	40-A	1	2"	150 RF	SHELL NOZZLE STEAM COIL INLET
N9	40-A	1	2"	150 RF	SHELL NOZZLE STEAM COIL OUTLET
N10	27-A	1	2"	150 RF	SHELL NOZZLE PUMP SPILLBACK
N11	26-A	1	6"	150 RF	SHELL NOZZLE SPARE
N12	35-A	1	8"	150 RF	ROOF NOZZLE LEVEL SERVO W/INT.
-	34-1	3	8"	150 RF	FOAM CHAMBER CONNECTION
J1	33-A	1	2"	150 RF	ROOF NOZZLE (N_2 BLANKETING)
J2A/B	33-4	2	3/4"	3000 CL	ROOF NOZZLE (N_2 BLANKETING)
J3	32-A	1	12"	150 RF	ROOF NOZZLE (PSV)
J4	27-A	1	2"	150 RF	SHELL NOZZLE TIC
J5	28-A	1	4"	150 RF	SHELL NOZZLE LT
J6	28-A	1	4"	150 RF	SHELL NOZZLE LALL/LAHH
J7	27-A	1	2"	150 RF	SHELL NOZZLE TI
	DWG#29	4			GROUNDING LUGS
	DWG#18	1			NAMEPLATE
	DWG#57	1			PERIPHERAL HANDRAIL
	DWG#50	1			SPIRAL STAIRWAY
		1			VACONODECK
	17-A	1	60"		SUMP
	DWG#40-41				HEATER COIL
	DWG#45				DELUGE SYSTEM
	DWG#12-13				INSULATION SUPPORTS
	DWG#19				ANCHOR CHAIRS
		1			ROOF PLATFORM
		1 SET			CATHODIC PROTECTION EXT.
	DWG#35	1			STILLING WELL
J8	42-A	1	12"		ROOF NOZZLE (EMERGENCY VENT)

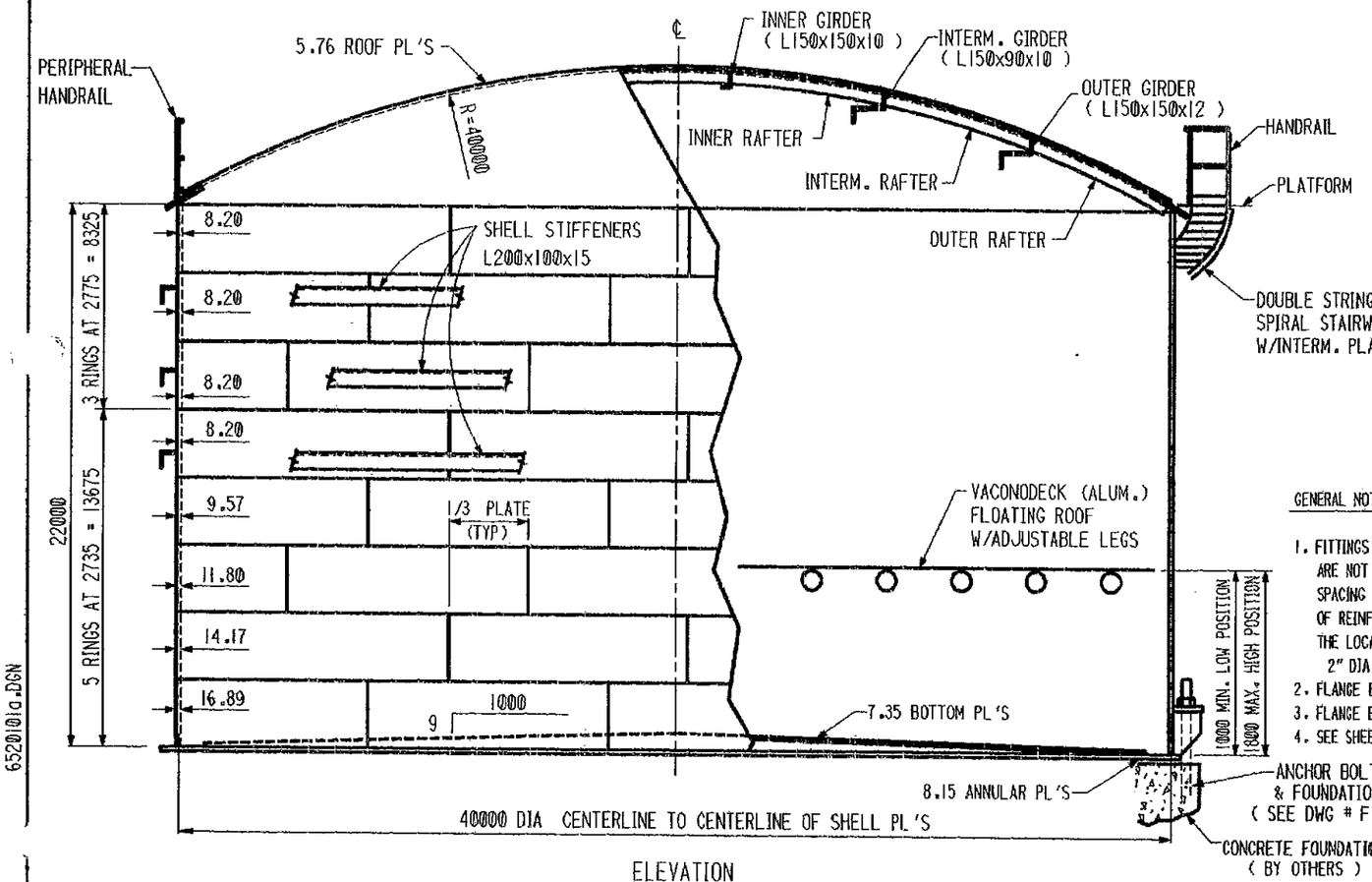

ELEVATION

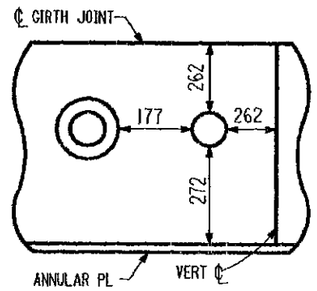

SKETCH 'A'
(BOTTOM RING ONLY)

AS - BUILT

KTT ACBI

STEVE COLLE SABCO 04/06/99

GENERAL NOTES:

1. FITTINGS TO BE LOCATED AS SHOWN ON ORIENTATION DRAWING(S). IF LOCATIONS ARE NOT GIVEN, LOCATE IN FIELD TO SUIT CUSTOMER MAINTAINING MINIMUM SPACING SHOWN IN SKETCH 'A'. DIMENSIONS GIVEN ARE FROM EDGE TO EDGE OF REINFORCING PL OR FROM CL OF BUTT WELD TO EDGE OF REINFORCING PL. THE LOCATION DIMENSION SHOWN IN SKETCH 'A' ARE ONLY FOR NOZZLES 2" DIA AND LESS
2. FLANGE BOLT HOLES TO STRADDLE VERTICAL CENTERLINE FOR SHELL NOZZLES.
3. FLANGE BOLT HOLES TO STRADDLE 0°-180° CENTERLINE FOR ROOF NOZZLES.
4. SEE SHEETS 800 & 802 FOR MATERIAL MANAGEMENT.

DETAILED FOR (1) TANK - (1) TANK REQUIRED

PARA-XYLENE STORAGE TANK

BECHTEL LTD CONTRACT No. 22854-LCC-005
(22854-000-F-001)

IR 1 Jun 99

▶ INDICATES CHANGE FROM PREVIOUS ISSUE

REVISIONS	BY	CHKD	DATE	MODIFICATION/REMARKS
3	AN	RLH	8/13/96	CHK'D LIST OF MATERIALS NOTE ADDED
4	DAN	RLH	7/28/97	REVISED LIST OF FITTINGS ADD J4-1 TO FITTING ELEVATION
5	KT	RLH	10-2-98	REVISE LIST OF FITTINGS

ARABIAN CBI LTD.

GENERAL ARRANGEMENT
40.0m DIA. x 22.0m HIGH URT
IBN RUSHD PTA & AROMATICS PLANT PROJECT
ARABIAN INDUSTRIAL FIBERS CO. LTD
YANBU, SAUDI ARABIA

ITEM NO 103-F-003 | CONTRACT NO ED 965201
BY Kev CHKD MSTG DATE 3/15/96 | DWG 1A | REV 5
R L HERBERT
ENGINEERING SUPERVISOR | SHT

This drawing is the property of ACBI and is to be used only in conjunction with the performance of work by ACBI. Reproduction in whole or in part is expressly forbidden.

652010ia.DGN

13:21:59 Oct. 2, 1996

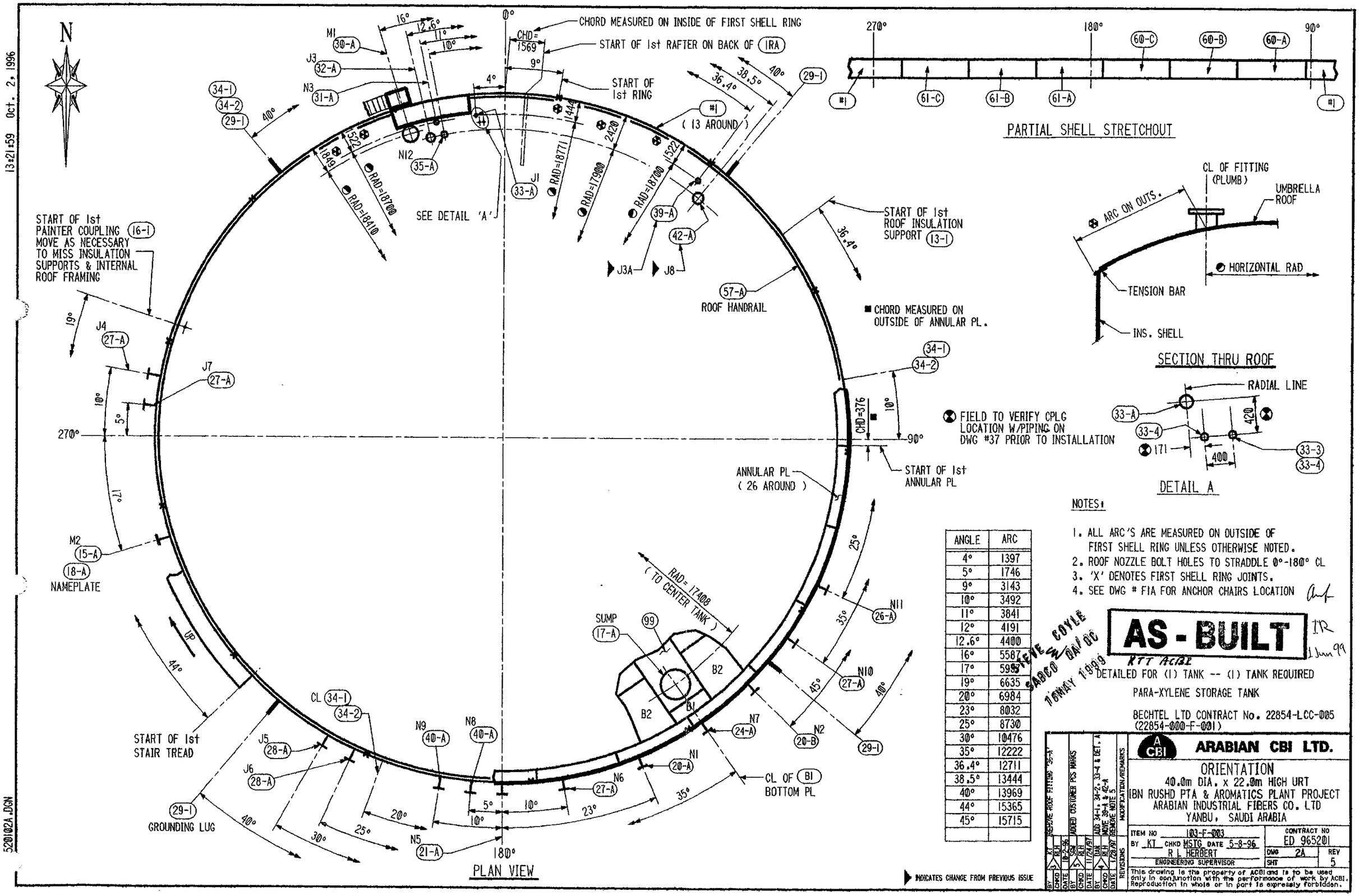

ANGLE	ARC
4°	1397
5°	1746
9°	3143
10°	3492
11°	3841
12°	4191
12.6°	4400
16°	5587
17°	5935
19°	6635
20°	6984
23°	8032
25°	8730
30°	10476
35°	12222
36.4°	12711
38.5°	13444
40°	13969
44°	15365
45°	15715

NOTES:

1. ALL ARC'S ARE MEASURED ON OUTSIDE OF FIRST SHELL RING UNLESS OTHERWISE NOTED.
2. ROOF NOZZLE BOLT HOLES TO STRADDLE 0°-180° CL
3. 'X' DENOTES FIRST SHELL RING JOINTS.
4. SEE DWG # F1A FOR ANCHOR CHAIRS LOCATION

AS - BUILT

IR 1 Jun 99

RTT ACBI

STEVE COYLE SABCO QA/QC 16 MAY 1999

DETAILED FOR (1) TANK -- (1) TANK REQUIRED

PARA-XYLENE STORAGE TANK

BECHTEL LTD CONTRACT No. 22854-LCC-005 (22854-000-F-001)

INDICATES CHANGE FROM PREVIOUS ISSUE

REVISIONS	BY	CHKD	DATE	MODIFICATION/REMARKS
5	KT	RLH	10-2-96	REMOVE ROOF FITTING "35-A"
4	KT	RLH	11/24/97	ADDED CUSTOMER PCS MARKS
3	DAK	RLH	1/28/97	ADD 34-1, 34-2, 33-4 & DET. A MOVE 39-A & 42-A REMOVE NOTE 5

ARABIAN CBI LTD.

ORIENTATION
40.0m DIA. x 22.0m HIGH URT
IBN RUSHD PTA & AROMATICS PLANT PROJECT
ARABIAN INDUSTRIAL FIBERS CO. LTD
YANBU, SAUDI ARABIA

ITEM NO 103-F-003
BY KT CHKD MSTG DATE 5-8-96
R L HERBERT
ENGINEERING SUPERVISOR

CONTRACT NO ED 965201
DWG 2A REV 5
SHT

This drawing is the property of ACBI and is to be used only in conjunction with the performance of work by ACBI. Reproduction in whole or in part is expressly forbidden.

520102A.DGN

09:12:59 Oct. 21, 1996

TECHNICAL & CONSTRUCTION INFORMATION

SPECIFICATIONS	API 650-9th ED.(1993/94 ADD.)
	APP E, F.1.2, H
SPECIFIC GRAVITY	0.88
SERVICE	ORTHOXYLENE
MAX DESIGN METAL TEMP.	85°C
MIN DESIGN METAL TEMP.	17°C
DESIGN PRESSURE	0.025 bar (g)
DESIGN VACUUM	0.006 bar (g)
DESIGN LIQUID LEVEL	16500 mm
DESIGN WIND VELOCITY	140 km/h (PER API 650)
SEISMIC	ZONE 1 (I=1.0 , S=1.2)
	PER API 650
ROOF LIVE LOAD	1.2 KPa PLUS VACUUM
NOMINAL CAPACITY	5180 m^3
PUMP IN RATE	37 m^3/hr
PUMP OUT RATE	1000 m^3/hr
FOUNDATION	BY OTHERS
CONSTRUCTION	BY ARABIAN CBI
CORROSION ALLOWANCE	
BOTTOM	1.0 mm
SHELL	1.0 mm
ROOF	1.0 mm
STRUCTURAL	1.0 mm

MATERIAL SPEC	
BOTTOM RECT.	A36
BOTTOM SKETCHES	A36
SHELL PLATES	A36
ROOF PLATES	A36
STRUCTURAL	A36
FLANGES	A105
NOZZLE NECKS	A53B SMLS OR A106B
INTERNAL PIPE	A53B SMLS OR A106B
INSPECTION - MILL	CTR'S
SHOP	ACBI
FIELD	ACBI & CUSTOMER
SURFACE PREPARATION	YES
PAINTING	YES
PWHT	NONE
INSULATION	NONE
MISC.	
GASKETS	REINZ-AFM37
BOLTS & NUTS	A193-B7 & A194-2H
RADIOGRAPHY	PER CODE
JOINT EFFICIENCY	N/A

DESIGN DATA

RING NO.	CORR. ALLOW. mm	DESIGN FOR PRODUCT PRODUCT SG= 0.88 ALLOWABLE STRESS MPa	DESIGN FOR PRODUCT PRODUCT SG= 0.88 REQUIRED THK. mm	DESIGN FOR TEST SG= 1.0 ALLOWABLE STRESS MPa	DESIGN FOR TEST SG= 1.0 REQUIRED THK. mm	THK. USED mm	MATERIAL SPECIFICATION	API MAT'L GROUP NO.
1	1.0	160.0	9.89	171.7	9.41	9.89	* A36	I
2	1.0	160.0	8.42	171.7	7.85	8.42	* A36	I
3	1.0	160.0	6.98	171.7	6.32	8.42	* A36	I
4	1.0	160.0	5.54	171.7	4.80	7.38	* A36	I
5	1.0	160.0	4.11	171.7	3.29	7.38	* A36	I
6	1.0	160.0	2.68	171.7	1.78	7.38	* A36	I
7	1.0	160.0	1.27	171.7	0.29	7.38	* A36	I

* KILLED OR SEMI KILLED

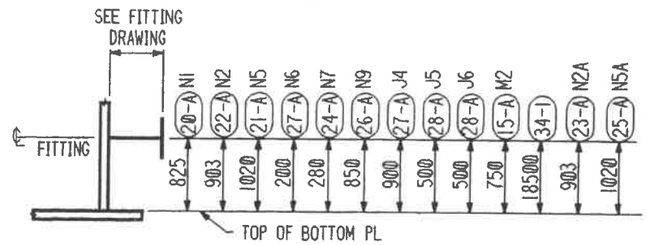

SHELL FITTING ELEVATION

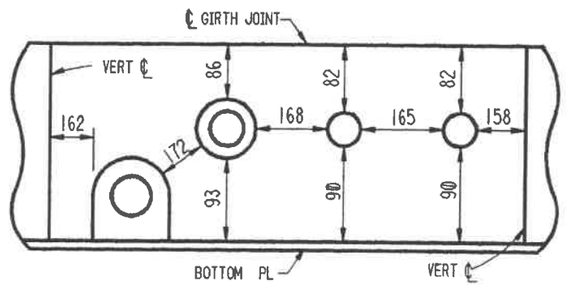

SKETCH 'A'
(BOTTOM RING ONLY)

LIST OF FITTINGS

CUST. MARK	ACBI MARK	QUANT	SIZE	RATING	DESCRIPTION
M1	30-A	1	30"	API	ROOF MANWAY
M2	15-A	1	24"	API	SHELL MANHOLE
N1	20-A	1	4"	150 RF	SHELL NOZZLE INLET
N2	22-A	1	10"	300 RF	SHELL NOZZLE SPARE W/BLIND
N3	31-A	1	6"	150 RF	ROOF NOZZLE VENT
N5	21-A	1	20"	150 RF	SHELL NOZZLE SPARE W/BLIND
N6	27-A	1	2"	150 RF	SHELL NOZZLE PURGE CONNECTION
N7	24-A	1	6"	150 RF	SHELL NOZZLE DRAIN W/INT.
N8	35-A	1	8"	150 RF	ROOF NOZZLE LEVEL SERVO W/INT.
N9	26-A	1	6"	150 RF	SHELL NOZZLE SPARE
	34-1	1	8"	150 RF	FOAM CHAMBER CONNECTION
J1	33-A	1	2"	150 RF	ROOF NOZZ (N_2 BLANKETING)
J2A/B	33-4	2	¾"	3000 CL	ROOF NOZZ (N_2 BLANKETING)
J3	32-A	1	4"	150 RF	ROOF NOZZLE PSV
J4	27-A	1	2"	150 RF	SHELL NOZZLE TI
J5	28-A	1	4"	150 RF	SHELL NOZZLE LT
J6	28-A	1	4"	150 RF	SHELL NOZZLE LAHH/LALL
J3A	39-A	1	12"	150 RF	VENT
J7	42-A	1	12"	150 RF	ROOF NOZZLE (EMERGENCY VENT)
	DWG#18	1			NAMEPLATE
	DWG#38	1			INTERNAL LADDER
		1			PERIPHERAL HANDRAIL
	DWG#50	1			SPIRAL STAIRWAY
	DWG#29	4			GROUNDING LUG
		1			VACONODECK
	17-A	1	60"		SUMP
	DWG#45				DELUGE SYSTEM
	DWG#19				ANCHOR CHAIRS
	DWG#35	1			STILLING WELL
		1 SET			CATHODIC PROTECTION (EXT.)
N2A	23-A	1	10"	300 RF	SHELL NOZZLE PUMP SPILLBACK
N5A	25-A	1	20"	150 RF	SHELL NOZZLE PUMP SUCTION W/INT.

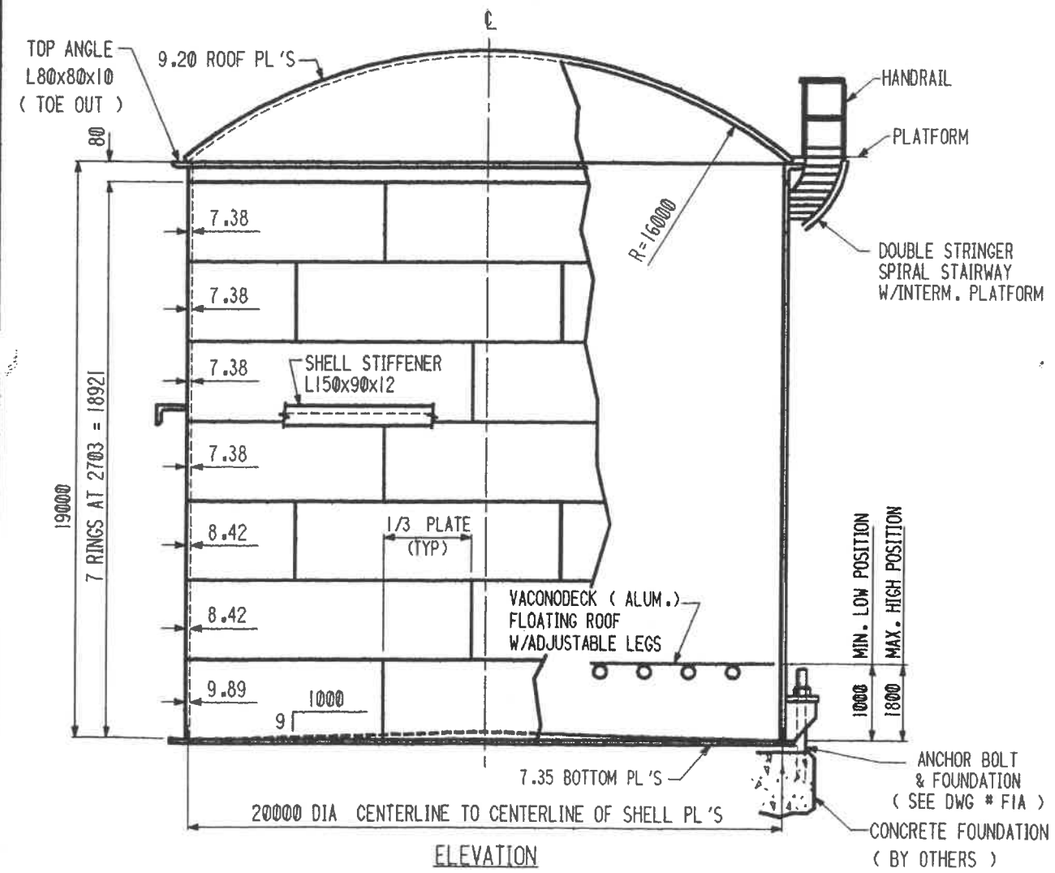

ELEVATION

GENERAL NOTES:

1. FITTINGS TO BE LOCATED AS SHOWN ON ORIENTATION DRAWING(S) . IF LOCATIONS ARE NOT GIVEN, LOCATE IN FIELD TO SUIT CUSTOMER MAINTAINING MINIMUM SPACING SHOWN IN SKETCH 'A'. DIMENSIONS GIVEN ARE FROM EDGE TO EDGE OF REINFORCING PL OR FROM CL OF BUTT WELD TO EDGE OF REINFORCING PL.
2. FLANGE BOLT HOLES TO STRADDLE VERTICAL CENTERLINE FOR SHELL NOZZLES.
3. FLANGE BOLT HOLES TO STRADDLE 0°-180° CENTERLINE FOR ROOF NOZZLES.
4. SEE SHEETS 800 & 802 FOR MATERIAL MANAGEMENT

AS-BUILT
ACBI

STEVE COYLE
SABCO QA/QC
16MAY 1999

IR 1 Jun 99 DETAILED FOR (1) TANK - (1) TANK REQUIRED

ORTHOXYLENE STORAGE TANK

BECHTEL LTD CONTRACT No. 22854-LCC-005
(22854-000-F-001)

REVISIONS	BY	CHKD	DATE	MODIFICATION/REMARKS
6	DAW	RLH	1/28/97	ADD 34-1 TO FITTING ELEVATION REVISE LIST OF FITTINGS
5	KT			REISSU
7	RLH	GMC	10-21-96	REVISED FITTING LIST

INDICATES CHANGE FROM PREVIOUS ISSUE

ARABIAN CBI LTD.

GENERAL ARRANGEMENT
20.0m DIA. x 19.0m HIGH SS DRT
IBN RUSHD PTA AND AROMATICS PLANT PROJECT
ARABIAN INDUSTRIAL FIBERS CO. LTD
YANBU, SAUDI ARABIA

ITEM NO 103-F-005
BY Key CHKD MSTG DATE 3/19/96
R L HERBERT
ENGINEERING SUPERVISOR

CONTRACT NO ED 965208
DWG 1A REV 7
SHT

This drawing is the property of ACBI and is to be used only in conjunction with the performance of work by ACBI. Reproduction in whole or in part is expressly forbidden.

652080101a.DGN

07:53:14 Oct. 8, 1996

TECHNICAL & CONSTRUCTION INFORMATION

SPECIFICATIONS	API 650-9th ED.(1993/94 ADD.)
	APP E, F.1.2, H
SPECIFIC GRAVITY	0.88
SERVICE	ORTHOXYLENE
MAX DESIGN METAL TEMP.	85°C
MIN DESIGN METAL TEMP.	17°C
DESIGN PRESSURE	0.025 bar (g)
DESIGN VACUUM	0.006 bar (g)
DESIGN LIQUID LEVEL	16500 mm
DESIGN WIND VELOCITY	140 km/h (PER API 650)
SEISMIC	ZONE 1 (I=1.0 , S=1.2)
	PER API 650
ROOF LIVE LOAD	1.2 KPa PLUS VACUUM
NOMINAL CAPACITY	5180 m^3
PUMP IN RATE	37 m^3/hr
PUMP OUT RATE	1000 m^3/hr
FOUNDATION	BY OTHERS
CONSTRUCTION	BY ARABIAN CBI
CORROSION ALLOWANCE	
BOTTOM	1.0 mm
SHELL	1.0 mm
ROOF	1.0 mm
STRUCTURAL	1.0 mm

MATERIAL SPEC	
BOTTOM RECT.	A36
BOTTOM SKETCHES	A36
SHELL PLATES	A36
ROOF PLATES	A36
STRUCTURAL	A36
FLANGES	A105
NOZZLE NECKS	A53B SMLS OR A106B
INTERNAL PIPE	A53B SMLS OR A106B
INSPECTION - MILL	CTR'S
SHOP	ACBI
FIELD	ACBI & CUSTOMER
SURFACE PREPARATION	YES
PAINTING	YES
PWHT	NONE
INSULATION	NONE
MISC.	
GASKETS	REINZ-AFM37
BOLTS & NUTS	A193-B7 & A194-2H
RADIOGRAPHY	PER CODE
JOINT EFFICIENCY	N/A

DESIGN DATA

RING NO.	CORR. ALLOW. mm	DESIGN FOR PRODUCT PRODUCT SG= 0.88 ALLOWABLE STRESS MPa	DESIGN FOR PRODUCT PRODUCT SG= 0.88 REQUIRED THK. mm	DESIGN FOR TEST SG= 1.0 ALLOWABLE STRESS MPa	DESIGN FOR TEST SG= 1.0 REQUIRED THK. mm	THK. USED mm	MATERIAL SPECIFICATION	API MAT'L GROUP NO.
1	1.0	160.0	9.89	171.7	9.41	9.89	* A36	I
2	1.0	160.0	8.42	171.7	7.85	8.42	* A36	I
3	1.0	160.0	6.98	171.7	6.32	8.42	* A36	I
4	1.0	160.0	5.54	171.7	4.80	7.38	* A36	I
5	1.0	160.0	4.11	171.7	3.29	7.38	* A36	I
6	1.0	160.0	2.68	171.7	1.78	7.38	* A36	I
7	1.0	160.0	1.27	171.7	0.29	7.38	* A36	I

* KILLED OR SEMI KILLED

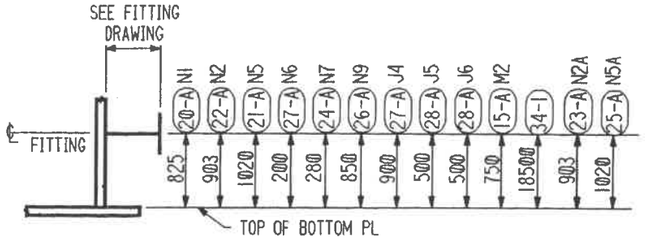

SHELL FITTING ELEVATION

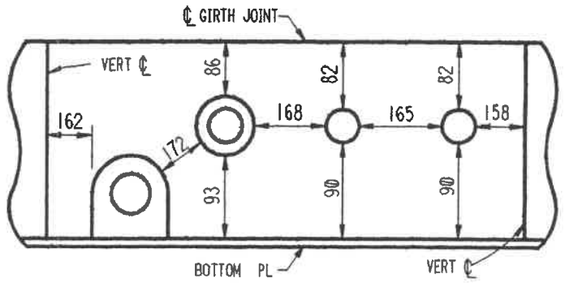

SKETCH 'A'
(BOTTOM RING ONLY)

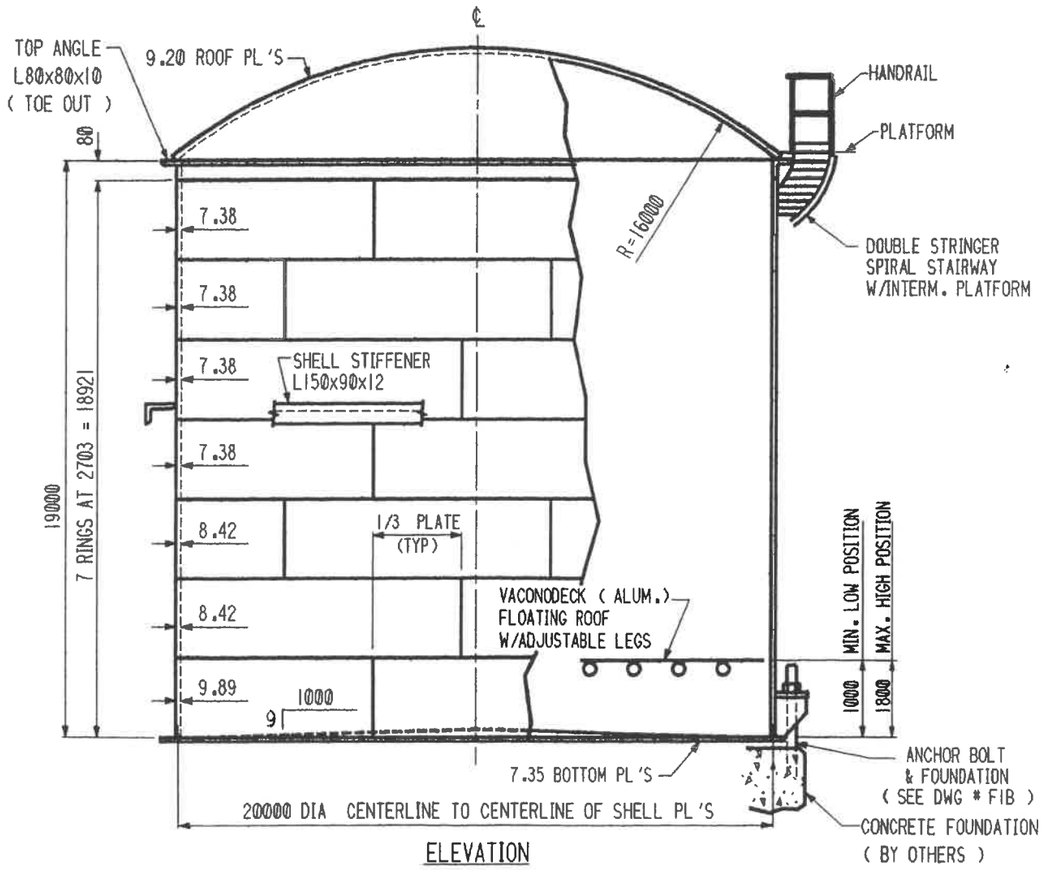

ELEVATION

LIST OF FITTINGS

CUST. MARK	ACBI MARK	QUANT	SIZE	RATING	DESCRIPTION
M1	30-A	1	30"	API	ROOF MANWAY
M2	15-A	1	24"	API	SHELL MANHOLE
N1	20-A	1	4"	150 RF	SHELL NOZZLE INLET
N2	22-A	1	10"	300 RF	SHELL NOZZLE SPARE W/BLIND
N3	31-A	1	6"	150 RF	ROOF NOZZLE VENT
N5	21-A	1	20"	150 RF	SHELL NOZZ SPARE W/BLIND
N6	27-A	1	2"	150 RF	SHELL NOZZLE PURGE CONNECTION
N7	24-A	1	6"	150 RF	SHELL NOZZLE DRAIN W/INT.
N8	35-A	1	8"	150 RF	ROOF NOZZLE LEVEL SERVO W/INT.
N9	26-A	1	6"	150 RF	SHELL NOZZLE SPARE
	34-1	1	8"	150 RF	FOAM CHAMBER CONNECTION
J1	33-A	1	2"	150 RF	ROOF NOZZ (N_2 BLANKETING)
J2A/B	33-4	2	3/4"	3000 CL	ROOF NOZZ (N_2 BLANKETING)
J3	32-A	1	4"	150 RF	ROOF NOZZLE PSV
J4	27-A	1	2"	150 RF	SHELL NOZZLE TI
J5	28-A	1	4"	150 RF	SHELL NOZZLE LT
J6	28-A	1	4"	150 RF	SHELL NOZZLE LAHH/LALL
J3A	39-A	1	12"	150 RF	VENT
J7	42-A	1	12"	150 RF	ROOF NOZZLE (EMERGENCY VENT)
	DWG#18	1			NAMEPLATE
	DWG#38	1			INTERNAL LADDER
		1			PERIPHERAL HANDRAIL
	DWG#50	1			SPIRAL STAIRWAY
	DWG#29	4			GROUNDING LUG
		1			VACONODECK
	17-A	1	60"		SUMP
	DWG#45				DELUGE SYSTEM
	DWG#19				ANCHOR CHAIRS
	DWG#35	1			STILLING WELL
		1 SET			CATHODIC PROTECTION (EXT.)
N2A	23-A	1	10"	300 RF	SHELL NOZZLE PUMP SPILLBACK
N5A	25-A	1	20"	150 RF	SHELL NOZZLE PUMP SUCTION W/INT.

GENERAL NOTES:

1. FITTINGS TO BE LOCATED AS SHOWN ON ORIENTATION DRAWING(S) . IF LOCATIONS ARE NOT GIVEN, LOCATE IN FIELD TO SUIT CUSTOMER MAINTAINING MINIMUM SPACING SHOWN IN SKETCH 'A'. DIMENSIONS GIVEN ARE FROM EDGE TO EDGE OF REINFORCING PL OR FROM CL OF BUTT WELD TO EDGE OF REINFORCING PL.
2. FLANGE BOLT HOLES TO STRADDLE VERTICAL CENTERLINE FOR SHELL NOZZLES.
3. FLANGE BOLT HOLES TO STRADDLE 0°-180° CENTERLINE FOR ROOF NOZZLES.
4. SEE SHEETS 800 & 802 FOR MATERIAL MANAGEMENT.

Chk
JR
1 Jun 99

DETAILED FOR (1) TANK - (1) TANK REQUIRED
ORTHOXYLENE STORAGE TANK

BECHTEL LTDCONTRACT No. 22854-LCC-005
(22854-000-F-001)

STEVE COYLE
SABCO QA/QC
16MAY 1999

AS - BUILT
KM ACBI

▶ INDICATES CHANGE FROM PREVIOUS ISSUE

REVISIONS	BY	CHKD	DATE	MODIFICATION/REMARKS
5	KJ	RLH	12-4-96	REMOVE ROOF NOZZLE "N10"
7	DWG	RLH	11/26/97	REVISED FITTING LIST
6	DWN	RLH	1/28/97	ADD 34-1 TO FITTING ELEVATION; REVISE LIST OF FITTINGS

ARABIAN CBI LTD.

GENERAL ARRANGEMENT
20.0m DIA. x 19.0m HIGH SS DRT
IBN RUSHD PTA AND AROMATICS PLANT PROJECT
ARABIAN INDUSTRIAL FIBERS CO. LTD
YANBU, SAUDI ARABIA

ITEM NO 103-F-006
BY Kev CHKD MSTG DATE 3/19/96
R L HERBERT
ENGINEERING SUPERVISOR
CONTRACT NO ED 965208
DWG 18 REV 7
SHT

This drawing is the property of ACBI and is to be used only in conjunction with the performance of work by ACBI. Reproduction in whole or in part is expressly forbidden.

6520801b.DGN

10:04:21 Oct. 30, 1996

6520802a.DGN

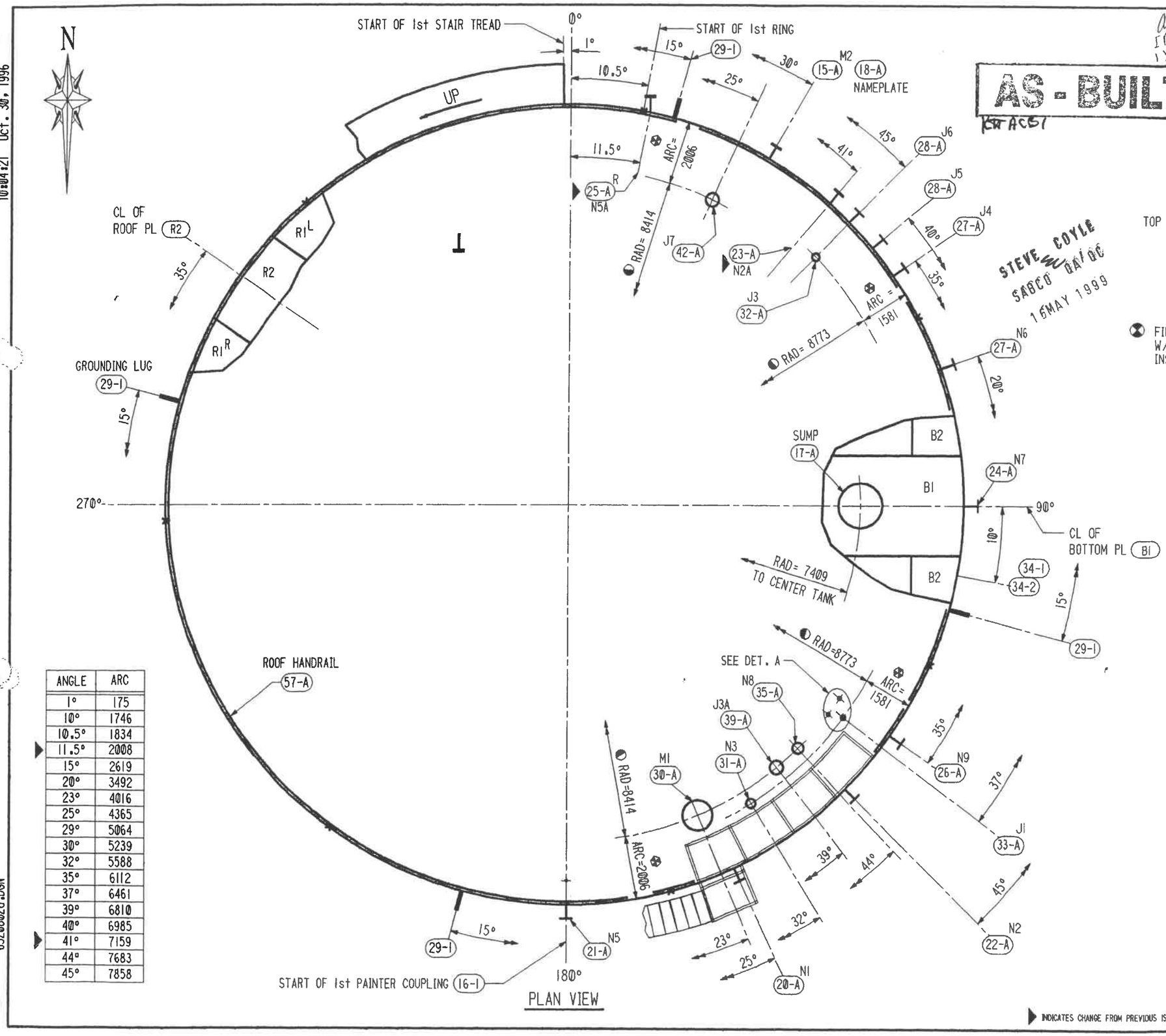

PLAN VIEW

ANGLE	ARC
1°	175
10°	1746
10.5°	1834
▶ 11.5°	2008
15°	2619
20°	3492
23°	4016
25°	4365
29°	5064
30°	5239
32°	5588
35°	6112
37°	6461
39°	6810
40°	6985
▶ 41°	7159
44°	7683
45°	7858

▶ INDICATES CHANGE FROM PREVIOUS ISSUE

AS-BUILT

KT ACST

Ant IR 1 Jun 99

STEVE COYLE SABCO GA/QC 15 MAY 1999

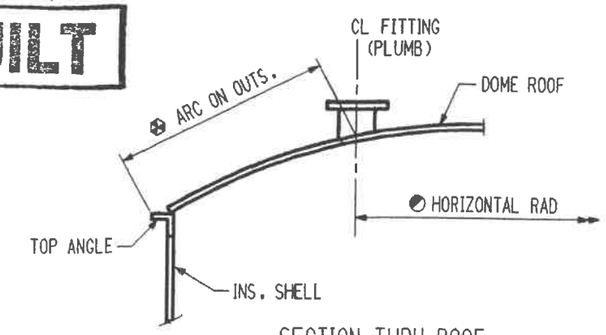

SECTION THRU ROOF

FIELD TO VERIFY CPLG LOCATION W/PIPING ON DWG #37 PRIOR TO INSTALLATION

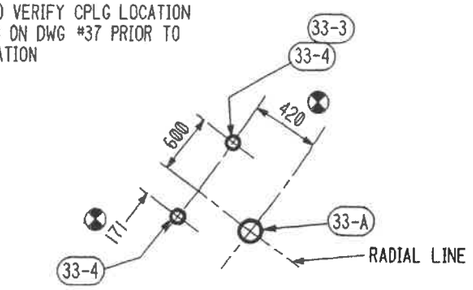

DETAIL A

NOTES:

1. ALL ARC'S ARE MEASURED ON OUTSIDE OF FIRST SHELL RING UNLESS OTHERWISE NOTED.
2. ROOF NOZZLE BOLT HOLES TO STRADDLE 0°-180° CL
3. 'X' DENOTES FIRST SHELL RING JOINTS.
4. SEE DWG # F1A FOR ANCHOR CHAIRS LOCATION

DETAILED FOR (1) TANK -- (1) TANK REQUIRED

ORTHOXYLENE STORAGE TANK

BECHTEL LTDCONTRACT No. 22854-LCC-005
(22854-000-F-001)

REVISIONS	BY	CHKD	DATE	MODIFICATION/REMARKS
3	KT	R.H	12-04-96	REMOVE ROOF NOZZLE "N18"
5	BWC	R.H	11/26/97	ADDED FITTINGS
4	DAB	R.H	1/30/97	ADD 34-1, 34-2, 33-3, 33-4 MOVE 32-A & 42-A REMOVE NOTE 5 & ADD DET. A

ARABIAN CBI LTD.

ORIENTATION
20.0m DIA. x 19.0m HIGH SS DRT
IBN RUSHD PTA AND AROMATICS PLANT PROJECT
ARABIAN INDUSTRIAL FIBERS CO. LTD
YANBU, SAUDI ARABIA

ITEM NO 103-F-005 | CONTRACT NO ED 965208
BY KT CHKD MSTG DATE 5-28-96
R L HERBERT
ENGINEERING SUPERVISOR
DWG 2A | REV 5
SHT

This drawing is the property of ACBI and is to be used only in conjunction with the performance of work by ACBI. Reproduction in whole or in part is expressly forbidden.

14 103-F-006

10:25:52 Oct. 30, 1996

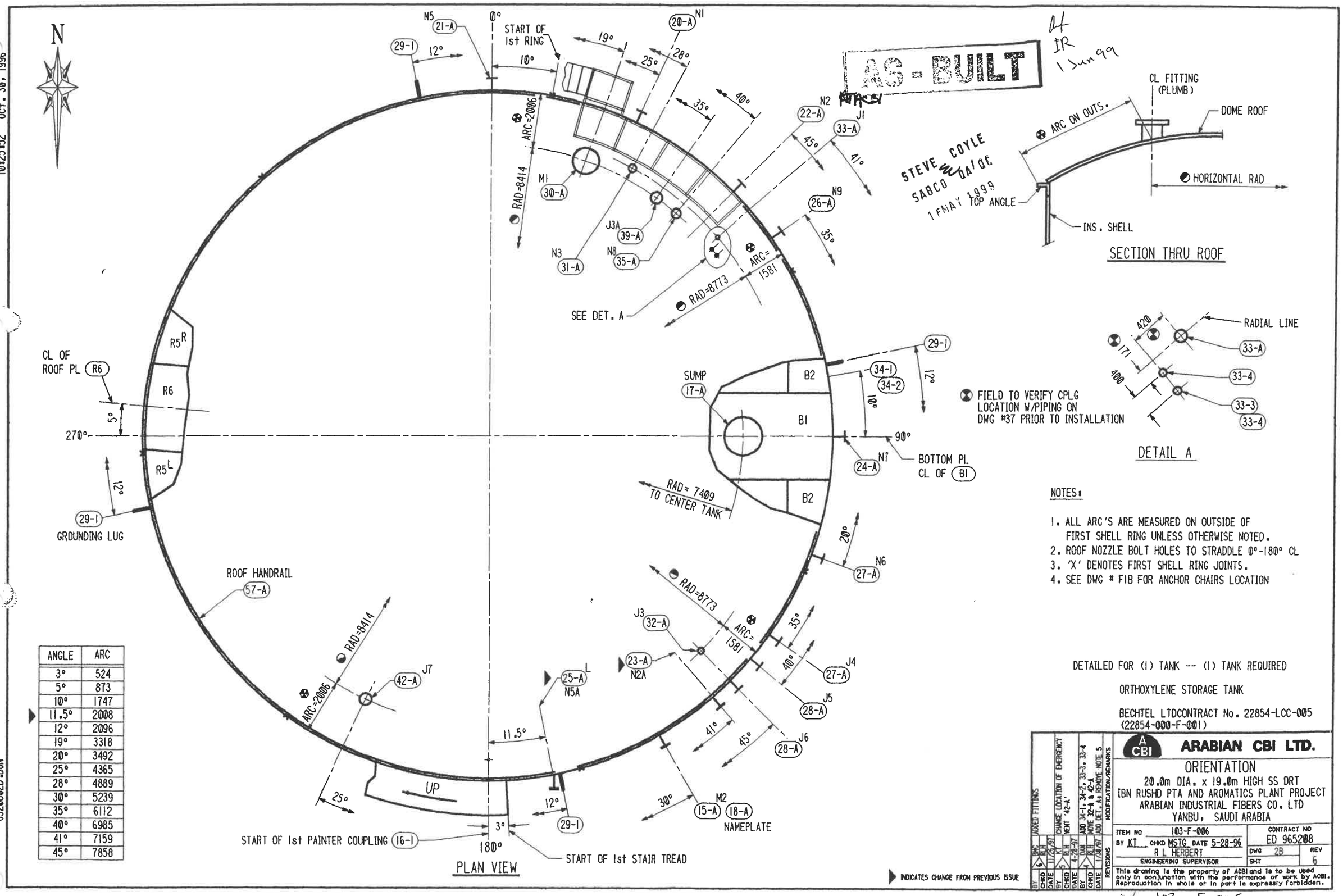

ANGLE	ARC
3°	524
5°	873
10°	1747
11.5°	2008
12°	2096
19°	3318
20°	3492
25°	4365
28°	4889
30°	5239
35°	6112
40°	6985
41°	7159
45°	7858

NOTES:

1. ALL ARC'S ARE MEASURED ON OUTSIDE OF FIRST SHELL RING UNLESS OTHERWISE NOTED.
2. ROOF NOZZLE BOLT HOLES TO STRADDLE 0°-180° CL
3. 'X' DENOTES FIRST SHELL RING JOINTS.
4. SEE DWG # F18 FOR ANCHOR CHAIRS LOCATION

DETAILED FOR (1) TANK -- (1) TANK REQUIRED

ORTHOXYLENE STORAGE TANK

BECHTEL LTDCONTRACT No. 22854-LCC-005
(22854-000-F-001)

REVISIONS	BY	CHKD	DATE	MODIFICATION/REMARKS
6	BWC	RLH	11/6/97	ADDED FITTINGS
5	BY	CHKD	DATE	CHANGE LOCATION OF EMERGENCY VENT '42-A'
	KY	RLH	4-23-97	
4	BY	CHKD	DATE	ADD 34-1, 34-2, 33-3, 33-4 MOVE 32-A & 42-A ADD DET. A; REMOVE NOTE 5
	DAN	RLT	1/24/97	

ARABIAN CBI LTD.

ORIENTATION
20.0m DIA. x 19.0m HIGH SS DRT
IBN RUSHD PTA AND AROMATICS PLANT PROJECT
ARABIAN INDUSTRIAL FIBERS CO. LTD
YANBU, SAUDI ARABIA

ITEM NO 103-F-006
BY KT CHKD MSTG DATE 5-28-96
R L HERBERT
ENGINEERING SUPERVISOR

CONTRACT NO ED 965208
DWG 2B
SHT
REV 6

This drawing is the property of ACBI and is to be used only in conjunction with the performance of work by ACBI. Reproduction in whole or in part is expressly forbidden.

6520802b.DGN

Ref 103-F-005
South

SHIP PC	MARK	ASSM PC	DESCRIPTION	LENGTH MM	SPEC	ID
			SHELL SECTION			
7	#1		PL 2703 x 9.89	8974	A36	A
			(2719 x 8990)			
14	#2,#3		PL 2703 x 8.42	8974	A36	A
			(2719 x 8990)			
28	#4-#7		PL 2703 x 7.38	8974	A36	A
			(2719 x 8990)			
1	TA		L 80 x 80 x 10 * RUN	63176	A36	Ac
			ROLL SHR	**		
			* 305 MM INCLUDED FOR FIELD TRIM			
			** ADD 914 MM TO EA. PIECE FOR			
			SHEAR			

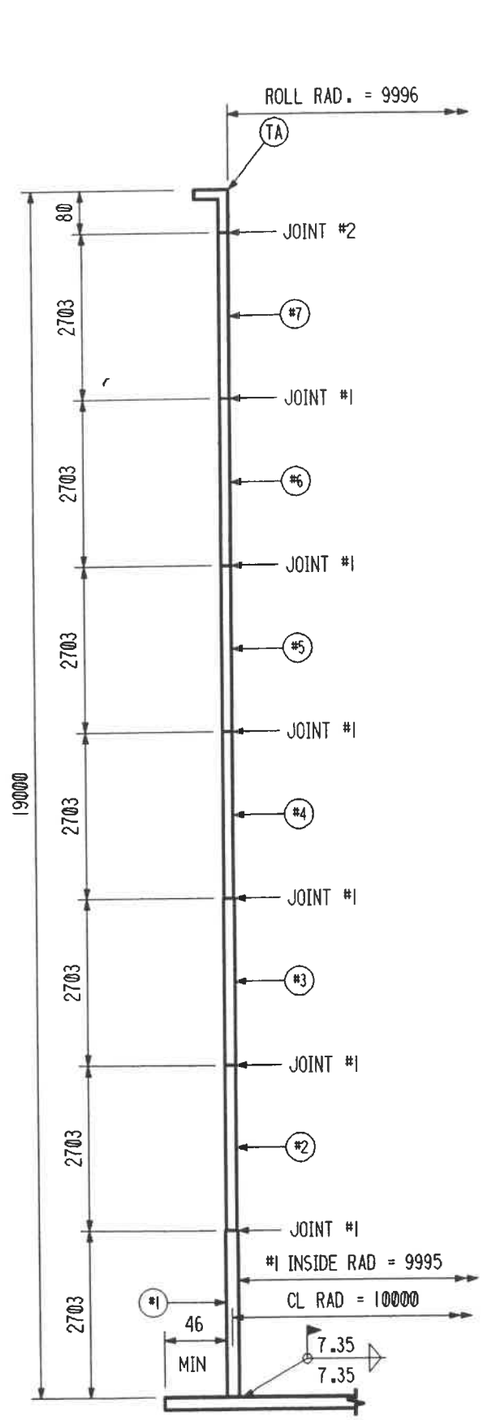

ALL PL CL STACKED

OUTSIDE CIRC ON FIRST RING = 62863
OUTSIDE CIRC ON TOP RING = 62855

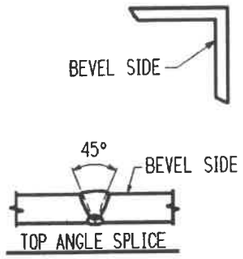

TOP ANGLE SPLICE

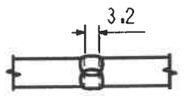

VERT RING #4-7

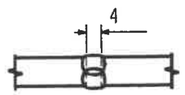

VERT RING #2,3

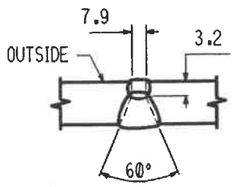

VERT RING #1

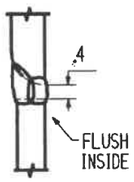

GIRTH JOINT #2

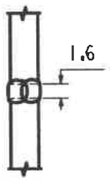

GIRTH JOINT #1
USE 2 MM SHIMS

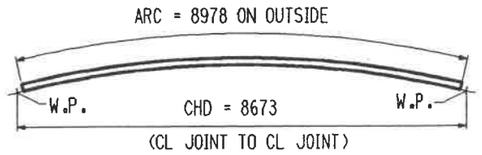

TYP SHELL PLATE #1 DETAIL

GENERAL NOTES :

1. BILLED PLATE LENGTHS ARE FINISHED 2 MM SHORTER THAN THEORETICAL LENGTH.
2. SHOP PUNCH MARK INSIDE TOP EDGE OF PLATES 2991 MM FROM EACH END.

DETAILED & BILLED FOR (1) TANK - (2) TANKS REQUIRED

ORTHOXYLENE STORAGE TANK

BECHTEL LTD CONTRACT No. 22854-LCC-005

STEVE SABCO QA/QC 16MAY 1999

AS-BUILT
KSA ACBI
IR 1 Jun 99

INDICATES CHANGE FROM PREVIOUS ISSUE

REVISIONS	BY	CHKD	DATE
MODIFICATION/REMARKS			
WELDS REVISED	MSTC	MSTC	6/25/96

ARABIAN CBI LTD.

SHELL SECTION
20.0m DIA. x 19.0m HIGH SS DRT
IBN RUSHD PTA AND AROMATICS PLANT PROJECT
ARABIAN INDUSTRIAL FIBERS CO. LTD
YANBU, SAUDI ARABIA

ITEM NO 103-F-005 & 103-F-006
BY Kev CHKD MSTG DATE 3/26/96
R L HERBERT
ENGINEERING SUPERVISOR

CONTRACT NO ED 965208
DWG 3 REV 1
SHT

This drawing is the property of ACBI and is to be used only in conjunction with the performance of work by ACBI. Reproduction in whole or in part is expressly forbidden.

16:28:44 Apr. 22 1996

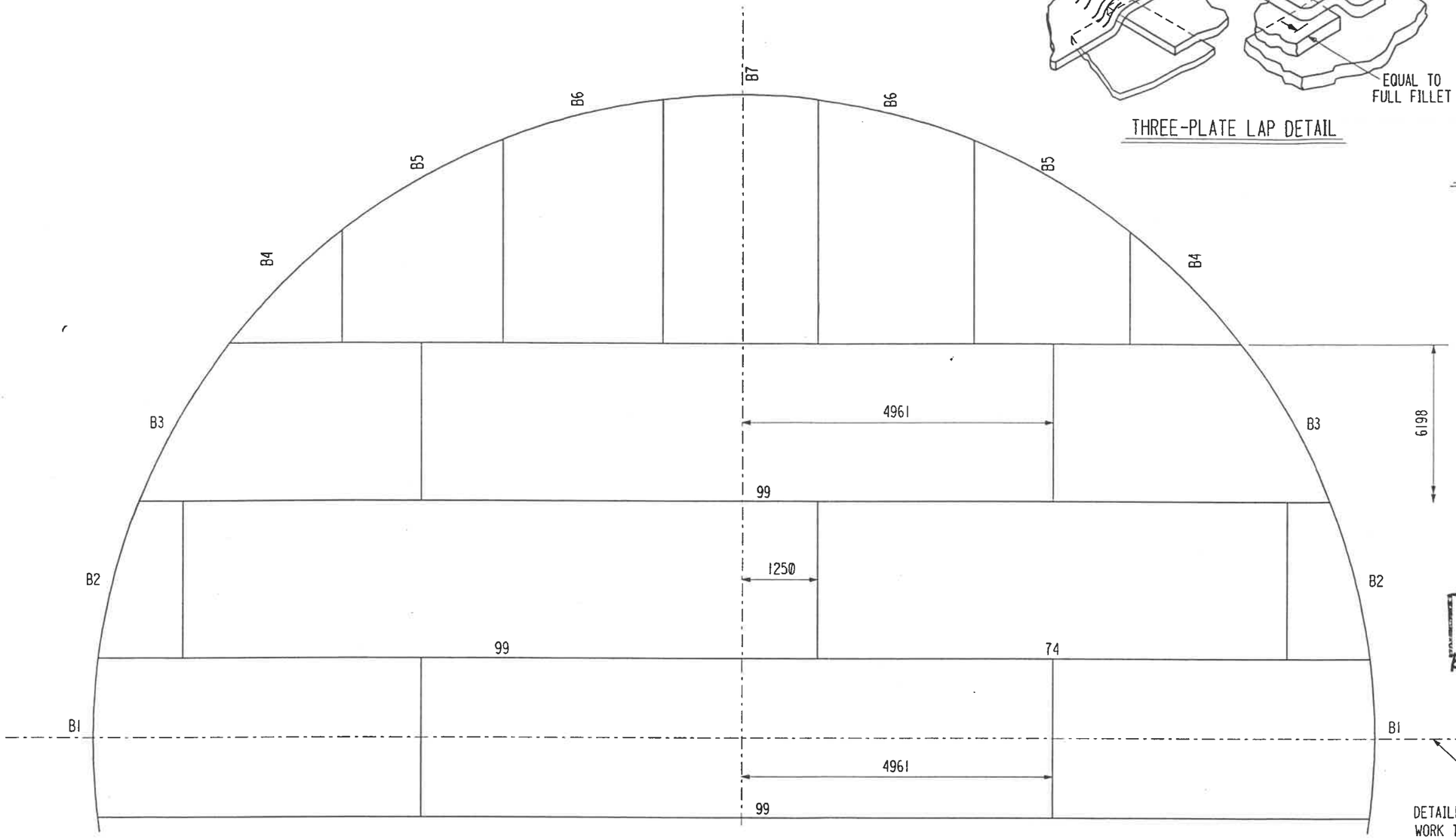

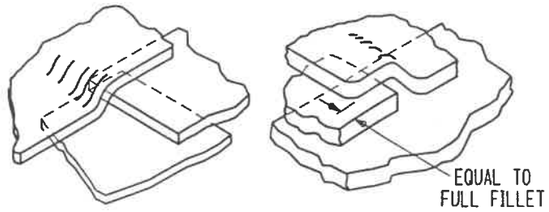

THREE-PLATE LAP DETAIL

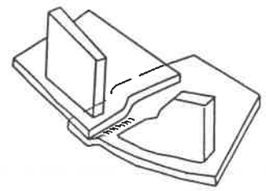

BREAKDOWN LAP OF SKETCH PLATE

STEVE COYLE
SABCO QA/QC
16MAY 1999

AS - BUILT
ACBI

DETAILED FOR (1) TANK -- (2) TANKS REQUIRED
WORK THIS DRAWING WITH DRAWING #6

ORTHOXYLENE STORAGE TANK

BECHTEL LTDCONTRACT No. 22854-LCC-005
(22854-000-F-001)

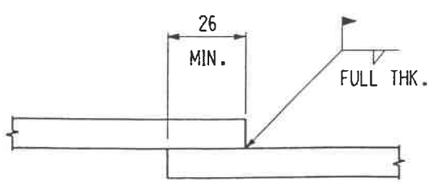

TYP SECTION THRU LAP

HALF PLAN OF BOTTOM

ALL LAPS 26 MM
174 METERS OF 7.35 LAP WELD
DIMENSIONS ARE TO EDGE OF PLATE
ON WHICH THEY APPEAR

BURN & TAN RAD = 10075

STEVE COYLE
SABCO QA/QC
16MAY 1999

▶ INDICATES CHANGE FROM PREVIOUS ISSUE

BY	CHKD	DATE	BY	CHKD	DATE	BY	CHKD	DATE	REVISIONS	MODIFICATION/REMARKS

ARABIAN CBI LTD.

BOTTOM ASSEMBLY
20.0m DIA. x 19.0m HIGH SS DRT
IBN RUSHD PTA AND AROMATICS PLANT PROJECT
ARABIAN INDUSTRIAL FIBERS CO. LTD
YANBU, SAUDI ARABIA

ITEM NO 103-F-005/006
BY MSTC CHKD KWB DATE 4-22-96
R L HERBERT
ENGINEERING SUPERVISOR

CONTRACT NO ED 965208
DWG 5
SHT
REV 0

This drawing is the property of ACBI and is to be used only in conjunction with the performance of work by ACBI. Reproduction in whole or in part is expressly forbidden.

65208005.DGN

16:31:59 Apr. 22. 1996

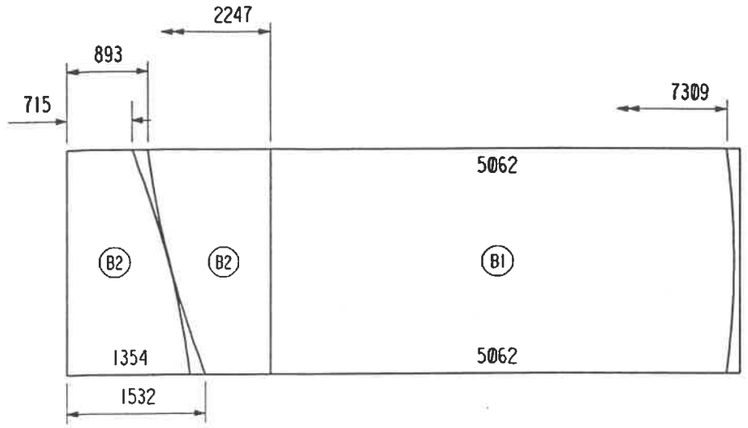

(74) (2) REQUIRED

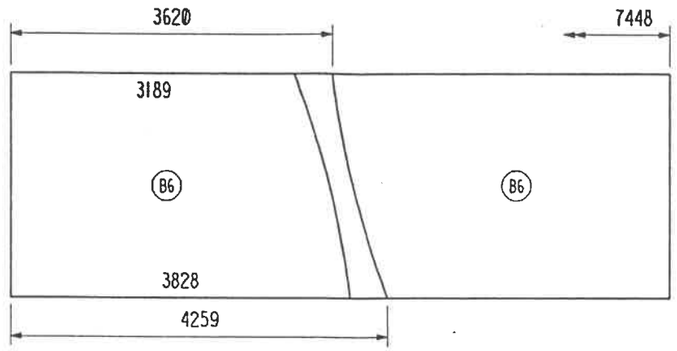

(74) (2) REQUIRED

SHP PC	MARK	ASSM PC	DESCRIPTION	LENGTH MM	SPEC	ID
			--RECTANGULAR--			
5	99		PL-2500 X 7.35	9922	A36	A
2	74		PL-2500 X 7.35	7448	A36	A
			--SKETCHES--			
2	B1		PL-SK X 7.35		A36	A
4	B2		PL-SK X 7.35		A36	A
4	B3		PL-SK X 7.35		A36	A
4	B4		PL-SK X 7.35		A36	A
4	B5		PL-SK X 7.35		A36	A
4	B6		PL-SK X 7.35		A36	A
2	B7		PL-SK X 7.35		A36	A

THEORETICAL WT OF APPLIED MATERIAL
FOR CUTTING SKETCHES = 10022
TOTAL MATERIAL REQUIRED FOR SKETCHES
(4) - PL-2500 X 7.35 X 9922
(4) - PL-2500 X 7.35 X 7448

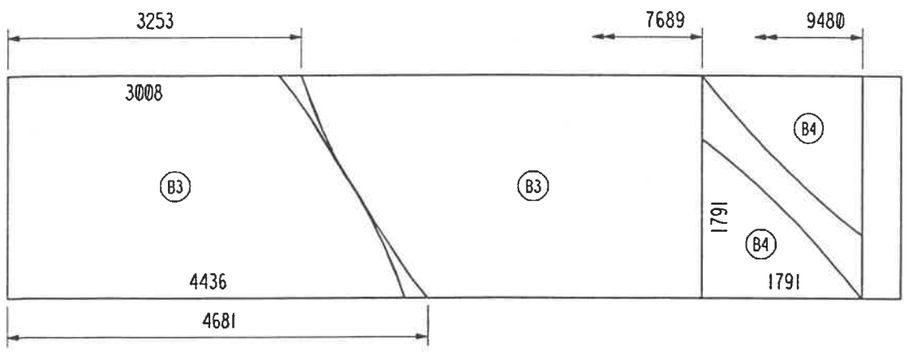

(99) (2) REQUIRED

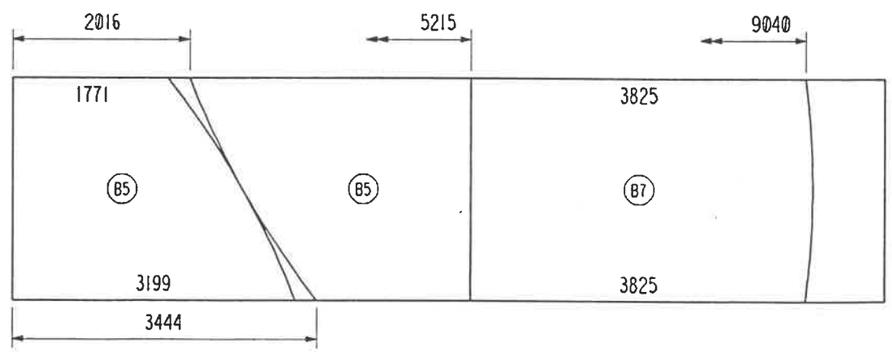

(99) (2) REQUIRED

IR
Ant
1 Jun 99

STEVE COYLE
SABCO QA/QC
16MAY 1999

AS-BUILT
RGT ARBI

ORTHOXYLENE STORAGE TANK

BECHTEL LTDCONTRACT No. 22854-LCC-005
(22854-000-F-001)

DETAILED AND BILLED FOR (1) TANK -- (2) TANKS REQUIRED
WORK THIS DRAWING WITH DRAWING #5

BURN RAD = 10075

STEVE COYLE
SABCO QA/QC
16MAY 1999

▶ INDICATES CHANGE FROM PREVIOUS ISSUE

BY	CHKD	DATE	BY	CHKD	DATE	BY	CHKD	DATE	REVISIONS	MODIFICATION/REMARKS

ARABIAN CBI LTD.

BOTTOM SKETCHES
20.0m DIA. x 19.0m HIGH SS DRT
IBN RUSHD PTA AND AROMATICS PLANT PROJECT
ARABIAN INDUSTRIAL FIBERS CO. LTD
YANBU, SAUDI ARABIA

ITEM NO 103-F-005/006
BY MSTG CHKD KWB DATE 4-22-96
R L HERBERT
ENGINEERING SUPERVISOR

CONTRACT NO ED 965208
DWG 6 SHT
REV 0

This drawing is the property of ACBI and is to be used only in conjunction with the performance of work by ACBI. Reproduction in whole or in part is expressly forbidden.

65208006.DGN

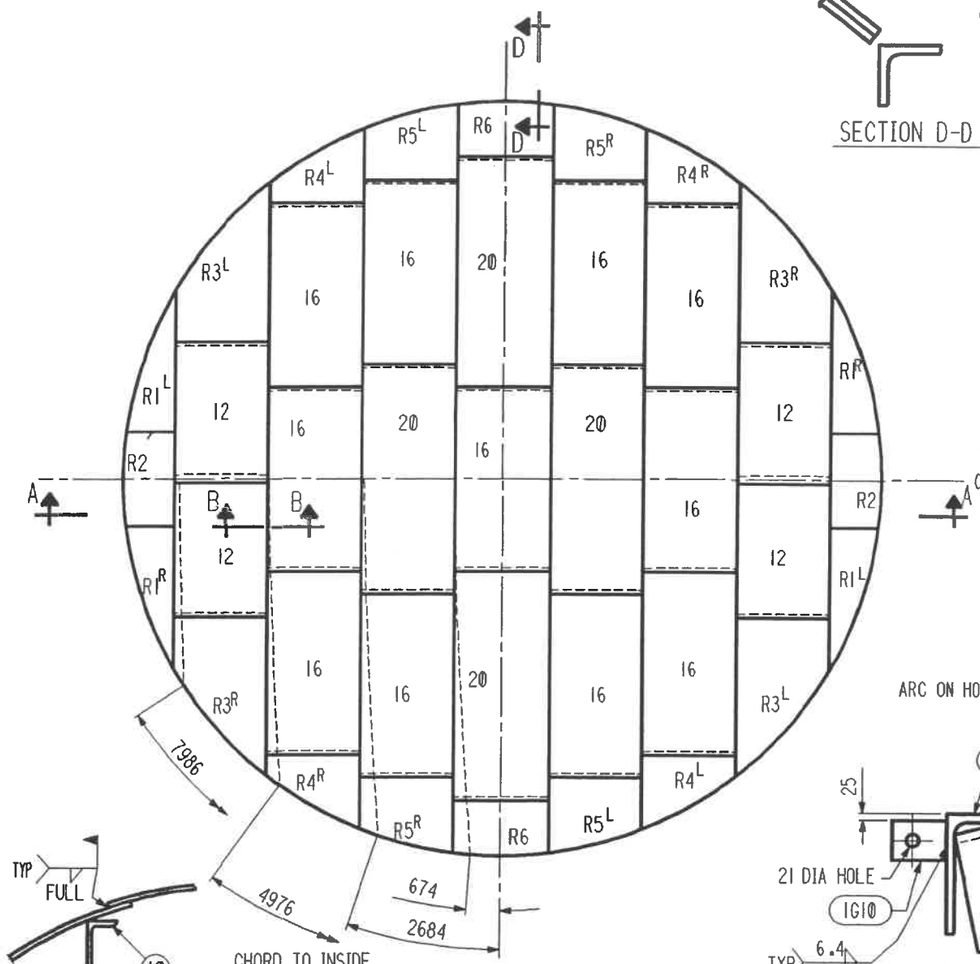

SECTION B-B

PLAN VIEW

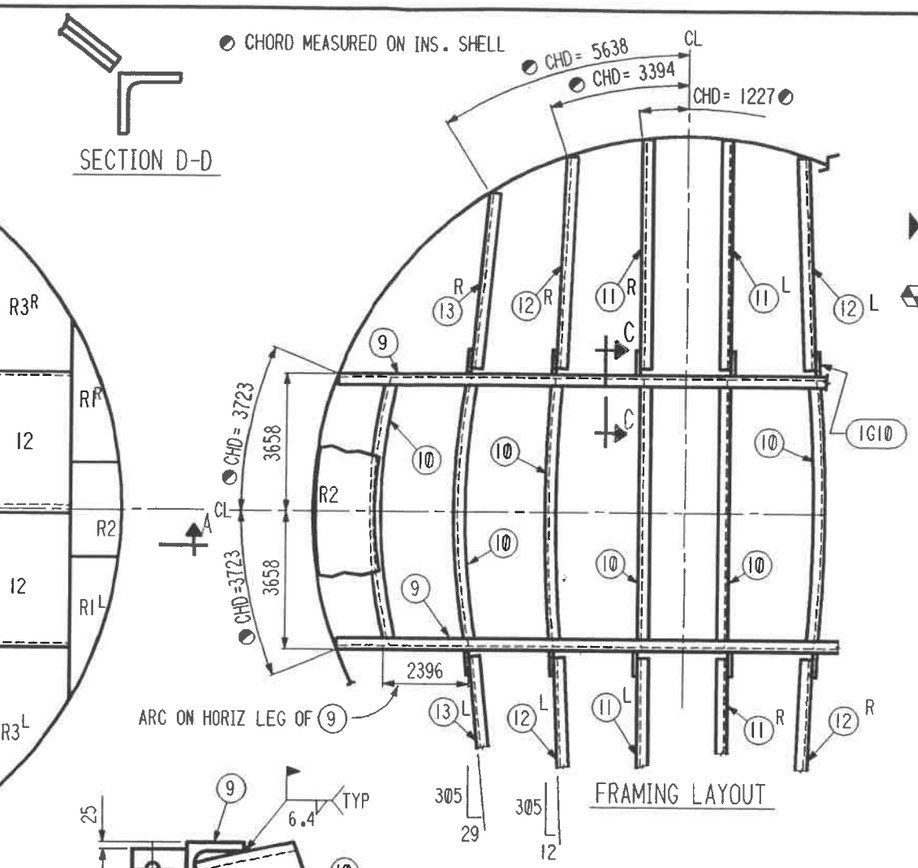

FRAMING LAYOUT

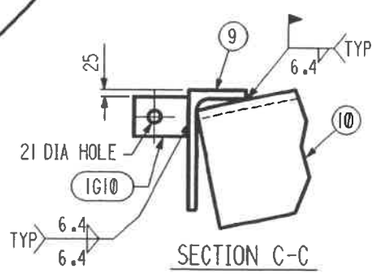

SECTION C-C

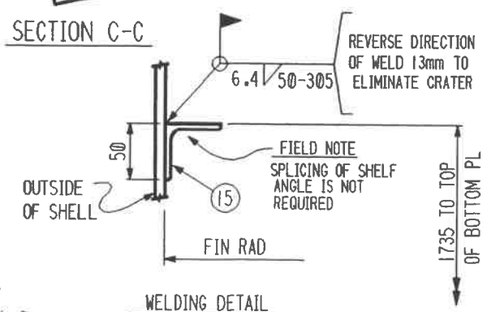

WELDING DETAIL
SHELF ANGLE TO SHELL

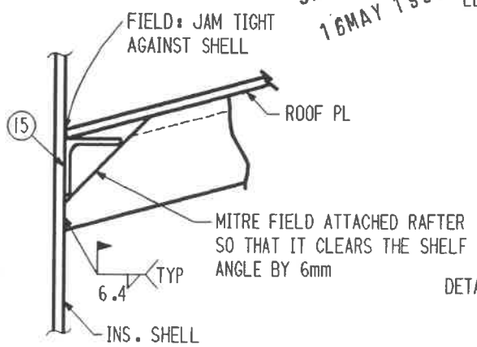

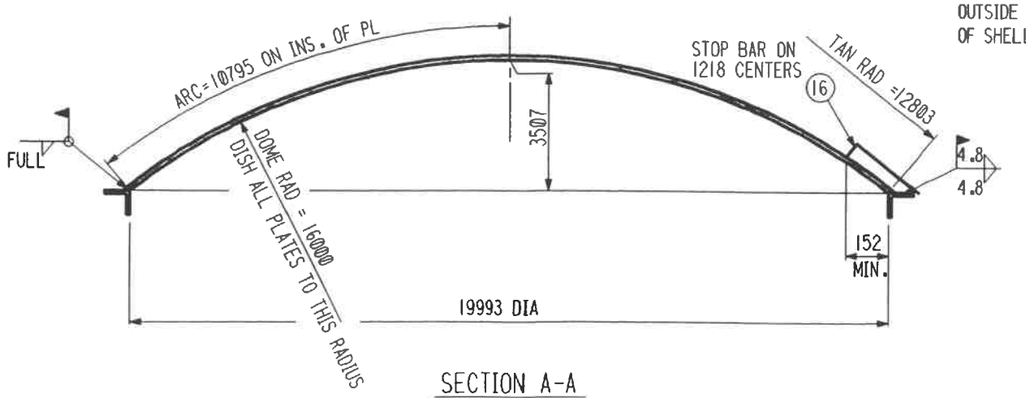

SECTION A-A

SHOP NOTE:
ALL PLATES 9.2mm THICK
PLATE DIM'S ARE TO EDGE OF PL ON WHICH THEY APPEAR
TRIM SK. PLATES TO 11800 RAD IN FLAT BEFORE DISHING

SHIP PC	MARK	ASSM PC	DESCRIPTION	LENGTH MM	SPEC	ID
			DOME ROOF			
4	R1 R/L		PL SK x 9.20 (CF 2500 x 4877 C2)		A36	A
2	R2		PL SK x 9.20 (CF 2500 x 4877)		A36	A
4	R3 R/L		PL SK x 9.20 (CF 2500 x 6096)		A36	A
4	R4 R/L		PL SK x 9.20 (CF 2500 x 6096 C2)		A36	A
4	R5 R/L		PL SK x 9.20 (CF 2500 x 6096 C2)		A36	A
2	R6		PL SK x 9.20 (CF 2500 x 6096 C2)		A36	A
4	20		PL 2500 x 9.20	6096	A36	A
11	16		PL 2500 x 9.20	4877	A36	A
4	12		PL 2500 x 9.20	3657	A36	A
2	8-A		MAIN ANGLE ASSEMBLY			
	8-9	4	L200 x 100 x 15 x SK FIN	10121	A36	C
			FIN ON RAD=15576 SHR	11091		
	1G10	12	BAR 65 x 10	89	A36	C
8	8-10		L200 x 100 x 15 FIN	7364	A36	C
			FIN ON RAD=16000 SHR	8364		
4	8-11 L/R		L200 x 100 x 15 x SK FIN	7138	A36	C
			FIN ON RAD=15953 SHR	8101		
4	8-12 L/R		L200 x 100 x 10 x SK FIN	6513	A36	C
			FIN ON RAD=15558 SHR	7479		
4	8-13 L/R		L200 x 100 x 10 x SK FIN	5271	A36	C
			FIN ON RAD=14754 SHR	6242		
1	8-15		L50 x 50 x 5 RUN	72900	A36	C
			FIN ON RAD=9995			
52	8-16		BAR 50 x 6 x SK	280	A36	D
13	8-17		BOLT 3/4" DIA HVY HEX	38	A307B	D
13	8-18		NUT 3/4" DIA HVY HEX		A563A	D

MAYBE SHIPPED IN TWO PIECES

AS - BUILT

STEVE COYLE
SABCO QA/QC
16MAY 1999

LENGTH OF 9.2 WELDS FOR ROOF PLATES (m)
ROOF TO TOP ANGLE = 62.8
LAP DOWN = 53.5
LAP SLOPING = 165.1
LAP OVERHEAD (IF REQ'D.) = 222.4

IR 1 Jun 99

NOTE:
1. WORK THIS DWG WITH DWG # 9 & 10.

DETAILED & BILLED FOR (1) TANK - (2) TANKS REQUIRED
ORTHOXYLENE STORAGE TANK

BECHTEL LTDCONTRACT No. 22854-LCC-005

FIELD NOTES:
1. ROOF SKETCH PLATES NUMBERED IN ORDER OF ERECTION. USE THE CHORDS SHOWN FOR LOCATING CORNER OF SKETCH PLATE.
2. NOTE THAT PLATE COURSES ARE 90° TO THE LONG CONTINUOUS ANGLE.
3. MINIMUM LAP IS 26mm. LAP BETWEEN ADJACENT COURSES WILL INCREASE TO A MAXIMUM AT THE TOP ANGLE. SKETCH PLATE LOCATING CHORDS AND SKETCH PLATE SIZES ARE BASED ON 38mm LAP.
4. BEFORE COMPLETING ERECTION OF FRAMING, 181 kg TOTAL IS THE MAXIMUM PERMISSIBLE CONCENTRATED LOAD ON THE FRAMING.

INDICATES CHANGE FROM PREVIOUS ISSUE

REVISIONS	BY	CHKD	DATE
REVISED BILLING & TITLE BLOCK	MSTG	RKS	17/5/96

MODIFICATION/REMARKS

ARABIAN CBI LTD.

DOME ROOF
20.0m DIA. x 19.0m HIGH SS DRT
IBN RUSHD PTA AND AROMATICS PLANT PROJECT
ARABIAN INDUSTRIAL FIBERS CO. LTD
YANBU, SAUDI ARABIA

ITEM NO 103-F-005/006
BY Key CHKD MSTG DATE 4/26/96
R L HERBERT
ENGINEERING SUPERVISOR

CONTRACT NO ED 965208
DWG 8 REV
SHT 1

This drawing is the property of ACBI and is to be used only in conjunction with the performance of work by ACBI. Reproduction in whole or in part is expressly forbidden.

10:09:22 JUL 5, 1996
NSP 8000802C9

14:14:59 Apr. 25 1996

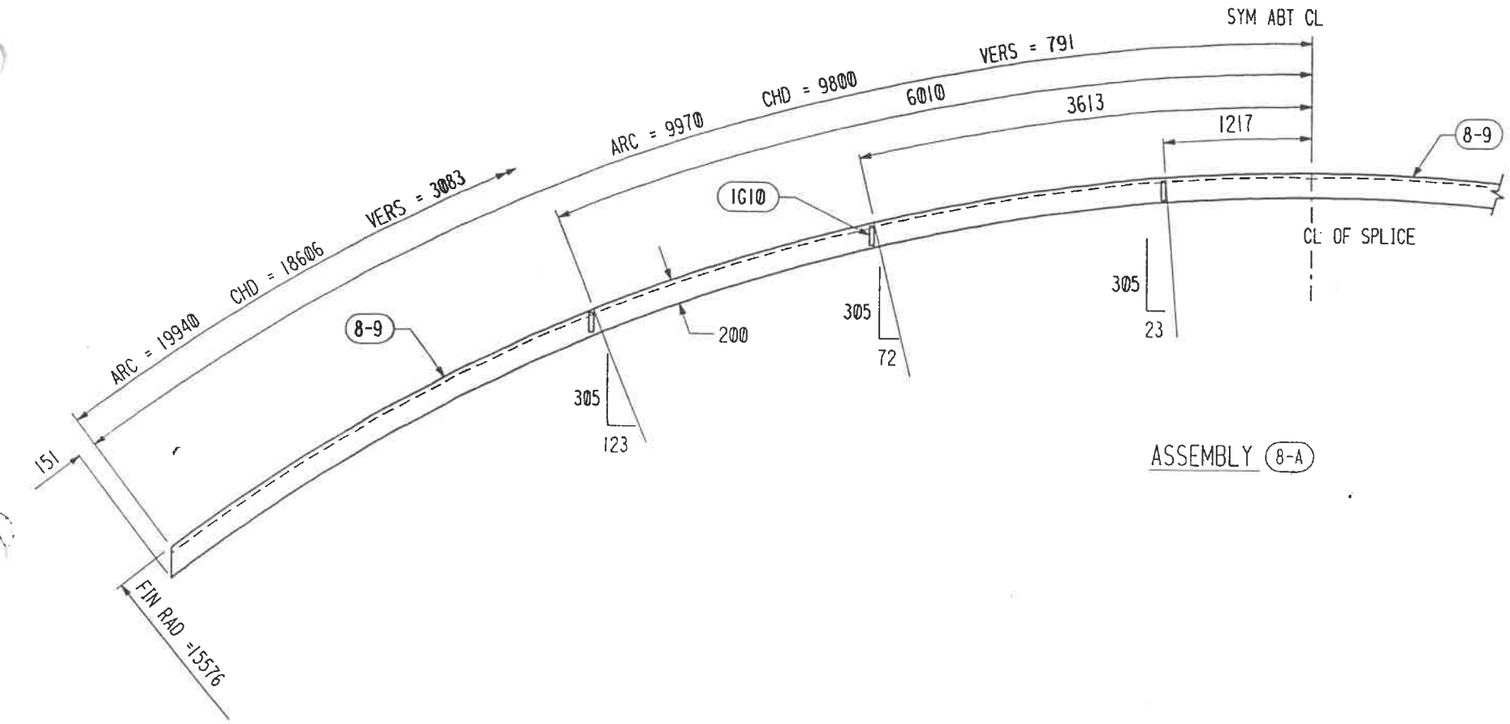

ASSEMBLY (8-A)

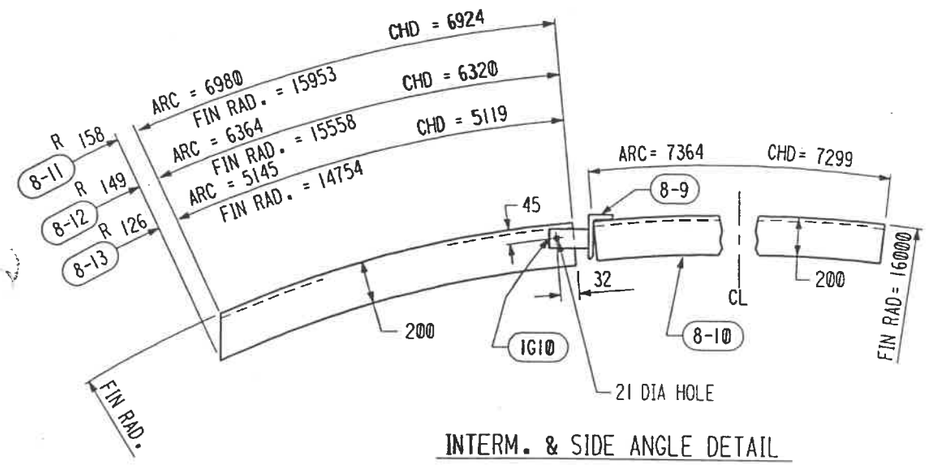

INTERM. & SIDE ANGLE DETAIL

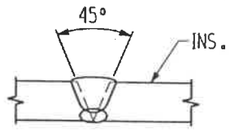

TYP ANGLE SPLICE
(IF NECESSARY)

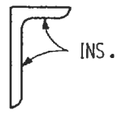

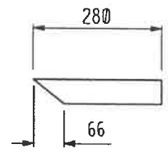

DETAIL Pc (8-16)

STEVE COYLE
SABCO QA/QC
16MAY 1999

Chk
IR
1 Jun 99

AS - BUILT
KSA ACGI

DETAILED FOR (1) - (2) REQUIRED
WORK THIS DRAWING WITH DRAWING #8

ORTHOXYLENE STORAGE TANK

BECHTEL LTDCONTRACT No. 22854-LCC-005
(22854-000-F-001)

INDICATES CHANGE FROM PREVIOUS ISSUE

BY	CHKD	DATE	BY	CHKD	DATE	BY	CHKD	DATE	REVISIONS	MODIFICATION/REMARKS

ARABIAN CBI LTD.

DOME ROOF
20.0m DIA. x 19.0m HIGH SS DRT
IBN RUSHD PTA AND AROMATICS PLANT PROJECT
ARABIAN INDUSTRIAL FIBERS CO. LTD
YANBU, SAUDI ARABIA

ITEM NO 103-F-005/006
BY Kev CHKD DATE 4/25/96
R L HERBERT
ENGINEERING SUPERVISOR

CONTRACT NO ED 965208
DWG 9
SHT
REV 0

This drawing is the property of ACBI and is to be used only in conjunction with the performance of work by ACBI. Reproduction in whole or in part is expressly forbidden.

65208009.DGN